MOTOTRBO™ REPEATER

PROFESSIONAL DIGITAL TWO-WAY RADIO SYSTEM

SLR 5000 Series Repeater Basic Service & Installation Manual

JUNE 2017

© 2017 Motorola Solutions, Inc. All rights reserved

MN001436A01-AD

Notice

Foreword

This manual covers all versions of the MOTOTRBO SLR 5000 Series Repeater, unless otherwise specified. It includes all the information necessary to maintain peak product performance and maximum working time, using levels 1 and 2 maintenance procedures. These levels of service go down to software issues or replacement of an accessory, which are commonly performed by local service centers, Motorola Solutions Authorized Dealers, self-maintained customers, and distributors.

CAUTION: These servicing instructions are for use by qualified personnel only. To reduce the risk of electric shock, do not perform any servicing other than that contained in the Operating Instructions unless you are qualified to do so. Refer all servicing to qualified service personnel.

General Safety Precautions

For more information, see General Safety and Installation Standards and Guidelines on page 5.

Computer Software Copyrights

The Motorola Solutions products described in this manual may include copyrighted Motorola Solutions computer programs stored in semiconductor memories or other media. Laws in the United States and other countries preserve for Motorola Solutions certain exclusive rights for copyrighted computer programs, including, but not limited to, the exclusive right to copy or reproduce in any form the copyrighted computer program. Accordingly, any copyrighted Motorola Solutions computer programs contained in the Motorola Solutions products described in this manual may not be copied, reproduced, modified, reverse-engineered, or distributed in any manner without the express written permission of Motorola Solutions.

Furthermore, the purchase of Motorola Solutions products shall not be deemed to grant either directly or by implication, estoppel, or otherwise, any license under the copyrights, patents or patent applications of Motorola Solutions, except for the normal non-exclusive license to use that arises by operation of law in the sale of a product.

Document Copyrights

No duplication or distribution of this document or any portion thereof shall take place without the express written permission of Motorola Solutions.

No part of this manual may be reproduced, distributed, or transmitted in any form or by any means, electronic or mechanical, for any purpose without the express written permission of Motorola Solutions.

Disclaimer

The information in this document is carefully examined, and is believed to be entirely reliable.

However, no responsibility is assumed for inaccuracies. Furthermore, Motorola Solutions reserves the right to make changes to any products herein to improve readability, function, or design. Motorola Solutions does not assume any liability arising out of the applications or use of any product or circuit described herein; nor does it cover any license under its patent rights nor the rights of others. Controlled copies of this document is available through Motorola Solutions On-Line (MOL).

Trademarks

MOTOROLA, MOTO, MOTOROLA SOLUTIONS and the Stylized M logo are trademarks or registered trademarks of Motorola Trademark Holdings, LLC and are used under license. All other trademarks are the property of their respective owners.

© 2017 Motorola Solutions, Inc.

All rights reserved.

Notice

General Safety and Installation Standards and Guidelines

WARNING:

- For safe installation, operation, service and repair of this equipment, follow the safety precautions and instructions described below, as well as any additional safety information in Motorola Solutions product service and installation manuals and the Motorola Solutions R56 Standards and Guidelines for Communications Sites manual (which can be obtained by ordering CDROM 9880384V83). To obtain copies of these materials, please contact Motorola Solutions as directed at the end of this section. After installation, these instructions should be retained and readily available for any person operating or servicing this repeater or working near it.
- Failure to follow these safety precautions and instructions could result in serious injury or property damage.
- The installation process requires preparation and knowledge of the site before installation begins. Review installation procedures and precautions in the Motorola Solutions R56 manual before performing any site or component installation. Personnel must use safe work practices and good judgment, and always follow applicable safety procedures, such as requirements of the Occupational Safety and Health Administration (OSHA), the National Electrical Code (NEC), and local codes.

The following are additional general safety precautions that must be observed:

- To continue compliance with any applicable regulations and maintain the safety of this equipment, do not install substitute parts or perform any unauthorized modifications.
- All equipment must be serviced by Motorola Solutions trained personnel.
- If troubleshooting the equipment while the power is on, be aware of live circuits which could contain hazardous voltage.
- Do not operate the radio transmitters unless all RF connectors are secure and all connectors are properly terminated.
- All equipment must be properly grounded in accordance with the Motorola Solutions R56 and specified installation instructions for safe operation.
- Slots and openings in the cabinet are provided for ventilation. Do not block or cover openings that protect the devices from overheating.
- Some equipment components can become extremely hot during operation. Turn off all power to the equipment and wait until sufficiently cool before touching.
- Maintain emergency first aid kits at the site.
- Never store combustible materials in or near equipment racks. The combination of combustible material, heat and electrical energy increases the risk of a fire hazard.
  Equipment shall be installed in a site that meets the requirements of a "restricted access location", per (UL60950-1 & EN60950-1), which is defined as follows: "Access can only be gained by service persons or by users who have been instructed about the reasons for the restrictions applied to the location and about any precautions that shall be taken; and access is

through the use of a tool or lock and key, or other means of security, and is controlled by the authority responsible for the location."

- Burn hazard. The metal housing of the product may become extremely hot. Use caution when working around the equipment.
- RF energy burn hazard. Disconnect power in the cabinet to prevent injury before disconnecting and connecting antennas.
- Shock hazard. The outer shields of all Tx and Rx RF cables outer shields must be grounded per Motorola Solutions R56 manual.
- Shock hazard. DC input voltage shall be no higher than 60 VDC. This maximum voltage shall include consideration of the battery charging "float voltage" associated with the intended supply system, regardless of the marked power rating of the equipment.
- All Tx and Rx RF cables shall be connected to a surge protection device according to Motorola Solutions R56 manual. Do not connect Tx and Rx RF cables directly to an outside antenna.
- Attention Compliance with National and International standards and guidelines for human exposure to Electromagnetic Energy (EME) at Transmitter Antenna sites generally requires that persons having access to a site shall be aware of the potential for exposure to EME and can exercise control of exposure by appropriate means, such as adhering to warning sign instructions. See this installation manual and Appendix A of Motorola Solutions R56.

This product complies with the requirements set forth by the European R&TTE regulations and applicable CENELEC standards concerning human exposure to Electromagnetic Energy (EME) at Transmitter Antenna sites. Appendix F: MOTOTRBO Repeater – EME ASSESSMENT on page 155 in this manual includes an EME exposure analysis of a typical system configuration for this product.

For a different system configuration than the typical configuration, compliance with applicable EME exposure standards (current versions of the EN50384 and EN50385 standards for occupational and general public exposure, respectively) can be evaluated by either employing the method illustrated in the typical system configuration EME exposure analysis included in Appendix F: MOTOTRBO Repeater – EME ASSESSMENT on page 155 in this manual, or employing another suitable method among those described in the current version of the EN50383 standard.

Once the occupational and general public compliance boundaries are determined, means to ensure that workers and people are outside the respective boundaries, for instance using appropriate signage or restricted access, should be implemented; if this is not possible or practically achievable for the specific system configuration, the configuration should be modified in order to make it possible. The R56 Standards and Guidelines for Communications Sites manual (which can be obtained by ordering CDROM 9880384V83) provides examples of signage that can be used to identify the occupational or general public compliance boundaries.

Refer to product specific manuals for detailed safety and installation instructions. Manuals can be obtained with product orders, downloaded from https://businessonline.motorolasolutions.com, or purchased through the Motorola Solutions Aftermarket & Accessory Department.

WARNING: This is a class A product. In a domestic environment, this product may cause radio interference in which case the user may be required to take adequate measures.

Notice

MOTOTRBO SLR 5000 Series Repeater Supplemental Safety and Installation Requirements

IMPORTANT:

- The MOTOTRBO SLR 5000 Series Repeater must be installed in a suitable, in-building enclosure. A restricted access location is required when installing this equipment into the end system.
- The repeater contains a Class 1 built-in power supply component. It is equipped with an appliance inlet for connecting to an AC input, as well as DC input terminals which meet SELV DC circuit requirements.
- When installing the equipment, all requirements of relevant standards and local electrical codes must be fulfilled.
- The maximum operating ambient temperature of this equipment is 60 °C. The maximum operating altitude is 2000 meters above sea level.
- The 13.6 VDC output from the power supply to the PA is at an energy hazard level (exceeds 240 VA). When installing into the end system, care must be taken so as not to touch the output wires.
- When the SLR 5000 Series Repeater is used in a DC reverting system, the DC power supply must be located in the same building as the MOTOTRBO SLR 5000 Series Repeater, and it must meet the requirements of a SELV circuit.

This page intentionally left blank.

Notice

Environmental Information

Material Content

NOTICE:

- The Motorola Solutions MOTOTRBO SLR 5000 Series Repeater system and its subsystems have been created in compliance with the environmental goals of the European Union's Restriction of Hazardous Substances (RoHS 2) Directive 2011/65/EU and the Waste Electrical and Electronic Equipment (WEEE) Directive 2012/19/EU as well as Motorola Solutions corporate goals to minimize environmental impact of its products.
- This Motorola Solutions policy is reflected throughout the entire design, procurement, assembly, and packaging process.
- In support of these efforts to provide environmentally-responsible products, please comply with the information in the following sections regarding product disposal for systems being replaced.

Disposal of your Electronic and Electric Equipment

Do not dispose of electronic and electric equipment or electronic and electric accessories with your household waste. In some countries or regions, collection systems have been set up to handle waste of electrical and electronic equipment.

In European Union countries, contact your local equipment supplier representative or service center for information about the waste collection system in your country.

Disposal Guideline

The European Union's WEEE directive symbol on a Motorola Solutions product indicates that the product should not be disposed of with household waste.

This page intentionally left blank.

Document History

The following major changes have been implemented in this manual since the previous edition:

Edition	Description	Date
MN001436A01-AA	Initial Release	April 2015
MN001436A01-AB	Second Release. Added 350 – 400 MHz Bands	August 2016
MN001436A01-AC	Third Release. Removed PMHN4299 Chassis Service Kit	February 2017
MN001436A01-AD	Fourth Release. Added UHF R2, 450 – 527 MHz Bands	June 2017

This page intentionally left blank.

Contents

Document History **11**
List of Figures **21**
List of Tables **25**
List of Procedures **27**
Related Publications **29**
Summary of Bands Available **31**
Chapter 1: SLR 5000 Series Repeater **37**
1.1 Notations Used in This Manual 37
1.2 Description 37
1.3 Operating Features 39
1.4 Frequency Ranges and Power Levels 41
1.5 Specifications 41
1.6 Theory of Operation 43
1.7 Basic Repeater Level Troubleshooting – RDAC and LEDs 45
1.8 Repeater Model Numbering Scheme 47
1.9 Model Chart 47
1.9.1 VHF High Power 47
1.9.2 UHF R1 High Power 48
1.9.3 UHF R2 High Power 48
Chapter 2: SLR 5000 Series Satellite Receiver **49**
2.1 Description 49
2.2 Operating Features 49
2.3 Frequency Ranges 49
2.4 Specifications 49
2.5 Configuration 49
2.6 Basic Station Level Troubleshooting – RDAC and LEDs 50
2.7 Model Chart 50
Chapter 3: SLR 5000 Series Modem **51**
3.1 Description 51
3.1.1 General Description 51
3.1.2 Input and Output Connections 51
3.1.3 Frequency Bands 53
3.2 Receiver Subsystem 53
3.2.1 Specifications 53
3.3 Transmitter Exciter Subsystem 54

3.3.1 Specifications....54
3.4 Station Control Subsystem....55
3.4.1 High Stability Reference Block....55
3.4.2 Audio....55
3.5 Station Control Interface....56
3.5.1 Front Panel Interface Connector....56
3.5.2 Rear Panel Connections....56
3.5.3 Power Amplifier Interface Connector....56
3.5.4 Power Supply Interface Connector....57
3.5.5 Expansion Board Interface Connector....57
3.5.6 Chassis ID Interface Connector....57
Chapter 4: SLR 5000 Series Power Amplifier....59
4.1 Description....59
4.1.1 General Description....59
4.2 Input and Output Connections....59
4.3 Frequency Ranges....60
4.4 Specifications....60
4.5 Modem Interface....61
Chapter 5: SLR 5000 Series Power Supply....63
5.1 Description....63
5.1.1 General Description....63
5.2 Specifications....64
5.3 Power Supply Interface....65
5.3.1 Power Source Inputs....65
5.3.2 Power Supply Outputs....66
5.3.3 Power Supply Digital Interface....67
5.3.4 Power Supply Output Cable Signaling....67
Chapter 6: SLR 5000 Series Front Panel....69
6.1 Description....69
6.1.1 General Description....69
6.2 Input and Output Connections....69
6.3 Interfaces....70
6.3.1 Modem Interface....70
6.3.2 User/Service Interface....70
6.3.2.1 USB....70
6.3.2.2 LED Indicators....70
Chapter 7: SLR 5000 Series Back Panel....71
7.1 Description....71
7.1.1 General Description....71

7.2 Back panel Interfaces.....72
7.2.1 AC Power Inlet.....72
7.2.2 DC Power Inlet/DC Charger Outlet.....72
7.2.3 Option 1/GNSS.....73
7.2.4 Option 2/WLAN.....73
7.2.5 USB.....73
7.2.6 Ethernet 1.....74
7.2.7 Ethernet 2.....75
7.2.8 Auxiliary (Aux).....75
7.2.9 Frequency Reference.....78
7.2.10 Receiver RF.....79
7.2.11 Transmitter RF.....79
7.2.12 Bonding Ground Connection.....79
Chapter 8: SLR 5000 Series Test Equipment And Service Aids.....81
8.1 Recommended Test Equipment.....81
8.2 Service Aids.....81
Chapter 9: SLR 5000 Series Performance Check or Testing.....83
9.1 General.....83
9.2 Transmitter Testing.....83
9.2.1 Introduction.....83
9.2.2 Test Equipment.....83
9.2.3 Verifying Transmitter Circuitry Procedure.....84
9.3 Receiver Testing.....85
9.3.1 Introduction.....85
9.3.2 Required Test Equipment.....85
9.3.3 Verifying Receiver Circuitry Procedure.....86
9.4 Auto Test and Tune Support.....87
Chapter 10: SLR 5000 Series Programming and Tuning.....89
10.1 Introduction.....89
10.2 Customer Programming Software Setup.....89
10.3 Reference Oscillator Alignment.....90
10.3.1 Tuning the Reference Oscillator Alignment.....90
10.4 Repeater Tuning Setup.....91
10.5 Rx Audio Level Set.....91
10.5.1 Tuning the Rx Audio Level Set.....91
10.6 Tx Audio Level Set.....92
10.6.1 Tuning the Tx Audio Level Set.....92
10.7 Modulation Limit Alignment.....93
10.7.1 Tuning the Modulation Limit (with no Tx Data and no PL).....93

10.7.2 Verifiying the Modulation Limit (with no Tx Data and no PL)..... 94
10.7.3 Tuning the Modulation Limit (with Tx Data or PL).....95
10.7.4 Verifying the Modulation Limit (with Tx Data or PL).....96
10.8 Changing to Battery Charger Only Mode.....96
Chapter 11: SLR 5000 Series Maintenance and Disassembly/Reassembly..... 97
11.1 Introduction.....97
11.2 Routine Maintenance.....97
11.3 Preventive Maintenance..... 97
11.3.1 Inspection.....97
11.3.2 Cleaning Procedures..... 97
11.4 Safe Handling of CMOS and LDMOS Devices.....98
11.5 Disassembly..... 99
11.5.1 Disassembly – General.....99
11.5.2 Disassembly – Detailed..... 100
11.5.2.1 Protective Cover Disassembly..... 100
11.5.2.2 Front Housing Disassembly..... 100
11.5.2.3 Cable Disassembly..... 100
11.5.2.4 Fan Disassembly.....101
11.5.2.5 Front Panel Disassembly..... 102
11.5.2.6 Power Supply Removal.....102
11.5.2.7 Modem Removal..... 103
11.5.2.8 Power Amplifier Module Removal..... 103
11.5.2.9 Back Panel Removal.....104
11.6 Assembly and Reassembly..... 105
11.6.1 Assembly – Detailed..... 105
11.6.1.1 Back Panel Installation.....105
11.6.1.2 Input Cable Installation.....106
11.6.1.3 Power Amplifier Module Installation..... 108
11.6.1.4 Modem Installation..... 108
11.6.1.5 Power Supply Installation.....110
11.6.1.6 Fan Installation.....111
11.6.1.7 Front Panel Installation..... 112
11.6.1.8 Cable Installation.....112
11.6.1.9 Front Housing Installation..... 114
11.6.1.10 Protective Cover Installation..... 115
11.7 Exploded Mechanical View.....115
11.8 Parts List.....115
11.9 Torque Charts.....117
Chapter 12: SLR 5000 Series Installation..... 119

12.1 Pre-Installation Considerations....119
12.1.1 Installation Overview....119
12.1.2 Site Environmental Conditions....119
12.1.3 Equipment Ventilation....120
12.1.3.1 Mounting in a Cabinet....120
12.1.3.2 Mounting in a Rack....121
12.1.4 AC and DC Input Power Requirements....121
12.1.4.1 AC Input Power Requirements....121
12.1.4.2 DC Input Power Requirements....121
12.1.4.3 Ground Connection....121
12.1.4.4 Battery Connection....121
12.1.4.5 RF Antenna Connections....122
12.1.4.6 System Cable Connections....122
12.1.5 Equipment Mounting Methods....122
12.1.5.1 Floor-Mounted Cabinet....122
12.1.5.2 Modular Racks....123
12.1.5.3 Desk Mount....124
12.1.6 Site Grounding and Lightning Protection....124
12.1.6.1 Electrical Ground....125
12.1.6.2 RF Ground....125
12.1.6.3 Lightning Ground....125
12.1.6.4 Equipment Grounding....125
12.1.7 Recommended Tools and Equipment....125
12.1.8 Equipment Unpacking and Inspection....126
12.1.8.1 Unpack Equipment....126
12.1.8.2 Initial Inspection....126
12.2 Mechanical Installation....127
12.2.1 Mounting Procedures....127
12.2.1.1 Transferring Equipment from Shipping Container to Rack or Cabinet...127
12.2.1.2 Installing Racks....127
12.2.1.3 Cabinet Installation....128
12.2.1.4 Desk Mount....128
12.3 Electrical Connections....128
12.3.1 Power Supply Connections....130
12.3.1.1 AC Input Power Connection....130
12.3.1.2 DC Input Power Connection/ DC Charger Connection....130
12.3.1.3 Ground Connection....130
12.3.1.4 Battery Connection....130
12.3.1.5 RF Antenna Connections....131

12.3.1.6 System Cable Connections....131
12.4 Post Installation Checklist....131
12.4.1 Apply Power....131
12.4.2 Verify Proper Operation....131
12.4.3 Front Panel LEDs....131
12.4.4 Repeater Codeplug Data Backup....132
12.5 Installing Repeater Hardware Options....132
12.5.1 General Bonding and Grounding Requirements....132
12.5.2 General Cabling Requirements....132
Appendix A: Accessories....133
Introduction....133
Cables....133
Documentation....133
Duplexers....133
Mounting....134
Preselectors....134
Service Parts....134
Service Tools....135
Appendix B: Replacement Parts Ordering....137
Replacement Parts Ordering....137
Basic Ordering Information....137
Motorola Solutions Online....137
Mail Orders....137
Telephone Orders....137
Fax Orders....138
Parts Identification....138
Product Customer Service....138
Appendix C: Motorola Solutions Service Centers....139
Motorola Solutions Service Centers....139
Servicing Information....139
Motorola Solutions Service Center....139
Motorola Solutions Federal Technical Center....139
Motorola Canadian Technical Logistics Center....139
Appendix D: SLR 5000 Series Third-Party Controllers....141
Overview....141
Community Repeater Panel....141
Compatibility....142
Hardware Connections....142
CPS Configuration....142

Community Repeater Panel Settings....144
Discriminator....144
Tx Audio....144
Continuous Tone-Controlled Squelch Systems (CTCSS) Out....144
Tx Audio Pre-Emphasis....145
Carrier Operated Relay (COR)....145
Phone Patch....145
Compatibility....145
Hardware Connections....145
CPS Configuration....146
Phone Patch Level Settings....147
Disc....147
Tx Audio....147
CTCSS/ DCS DECODE INPUT/ COR....147
Tone Remote Adapter....148
Compatibility....148
Hardware Connections....148
CPS Configuration (For a 15 Channel Remote Control)....149
Tone Remote Adapter Settings....151
Radio Rx....151
Radio Tx....151
Channel Steering....151
Monitoring....151
PTT....151
Wildcard 1 (optional)....151
Trunking Controllers....151
Compatibility....152
Hardware Connections....152
CPS Configuration....153
Trunking Controller Settings....154
Discriminator....154
Tx Audio....154
Tx Data....154
Appendix F: MOTOTRBO Repeater – EME ASSESSMENT....155
Executive Summary....155
Indoor Exposure Prediction Model....156
Exposure in Front of the Antenna....156
Exposure at Ground Level....157
Typical System Configuration....158

Exposure Limits 158
EME Exposure Evaluation 159
Exposure in Front of the Antenna 159
Exposure at Ground Level 159
Compliance Boundary Description 159
Product Put In Service 160
References 160
Glossary of Terms and Acronyms 163

List of Figures

Figure 1: Front view of the SLR 5000 Series Repeater....38
Figure 2: Rear view of the SLR 5000 Series Repeater.... 38
Figure 3: Front view (without top cover) of the SLR 5000 Series Repeater.... 39
Figure 4: Front view (without top and bottom covers and front panel) of the SLR 5000 Series Repeater....39
Figure 5: RDAC Diagnostic Screen....45
Figure 6: Repeater Model Numbering Scheme....47
Figure 7: “Operation Mode” configuration for Satellite Receiver Functionality.... 50
Figure 8: Modem Module Connector Locations....52
Figure 9: High Stability Reference Circuit....55
Figure 10: Audio Block Diagram....56
Figure 11: Power Amplifier Interface Connector Pin Locations.... 56
Figure 12: Power Supply Interface Connector Pin Locations.... 57
Figure 13: Expansion Board Interface Connector Pin Locations....57
Figure 14: Chassis ID Interface Connector Pin Locations....58
Figure 15: Input and Output Connections....60
Figure 16: Modem Interface Connector Pin Locations.... 61
Figure 17: Front View of the SLR 5000 Series Power Supply....64
Figure 18: Rear View of the SLR 5000 Series Power Supply.... 64
Figure 19: Power Source Inputs....65
Figure 20: Power Supply Outputs....66
Figure 21: Power Supply Digital Interface.... 67
Figure 22: Front Panel Input and Output Connections....69
Figure 23: Back Panel Connector Names and Locations....71
Figure 24: AC Power Inlet Connector 72
Figure 25: Repeater Power Switch....72
Figure 26: DC Power Inlet/DC Charger Outlet Connector....73
Figure 27: Option 1/GNSS Connector....73
Figure 28: Option 2/WLAN Connector....73
Figure 29: USB Connector.... 74
Figure 30: Ethernet 1 Connector.... 74
Figure 31: Ethernet 2 Connector.... 75
Figure 32: Auxiliary Connector.... 76
Figure 33: Frequency Reference Connector.... 78
Figure 34: Receiver RF Connector....79
Figure 35: Transmitter RF Connector....79

Figure 36: Bonding Ground Connection....79
Figure 37: Test Equipment Setup for Verifying Transmitter Circuitry....85
Figure 38: Test Equipment Setup for Verifying Receiver Circuitry....86
Figure 39: Customer Programming Software Setup....89
Figure 40: Front view of SLR 5000 Series Repeater....90
Figure 41: Rear view of SLR 5000 Series Repeater....90
Figure 42: Tx Menu Tree (Ref. Oscillator)....91
Figure 43: SLR 5000 Series Repeater Tuning Equipment Setup....91
Figure 44: Rx Menu tree (Rx Rated Volume)....92
Figure 45: Auxiliary Connector....92
Figure 46: Tx Menu Tree (Tx Audio Level)....93
Figure 47: TX Menu Tree (Tuning Procedure with No Tx Data)....94
Figure 48: Example of Maximum Deviation Limit Calculation....95
Figure 49: Removing Front Housing from Repeater....100
Figure 50: Removing Cables....101
Figure 51: Removing Fan....102
Figure 52: Removing Front Panel....102
Figure 53: Removing Power Supply Module from Repeater....103
Figure 54: Removing Modem....103
Figure 55: Removing Power Amplifier Module....104
Figure 56: Removing Rx and REF BNC Cables....104
Figure 57: Removing Ground Screw....105
Figure 58: Installing M3 Screws....106
Figure 59: Installing M6 Screw....106
Figure 60: Installing Rx and Reference Cables....107
Figure 61: Assembling Lock Washers onto Connectors....107
Figure 62: Installing WLAN and GNSS Rubber Plugs....107
Figure 63: Installing Power Amplifier Module into Repeater....108
Figure 64: Securing Power Amplifier Module to Repeater Chassis....108
Figure 65: Securing Modem to Repeater Frame....109
Figure 66: Securing Rx and Reference Cable Connectors....109
Figure 67: Modem FRU Product Label....110
Figure 68: Installing Power Supply Module....110
Figure 69: Installing M4 Screws....111
Figure 70: Snapping Fan Cable....111
Figure 71: Installing Fan....112
Figure 72: Installing Front Panel....112
Figure 73: Installing Power Screws....113
Figure 74: Securing Cables....113

Figure 75: Securing Front Housing....114
Figure 76: Installing M3 Screws.... 115
Figure 77: SLR 5000 Series Assembly Exploded View....115
Figure 78: Floor Mount Cabinet....123
Figure 79: Modular Rack.... 124
Figure 80: Desk Mount Installation.... 128
Figure 81: Back Panel Connector Names and Locations....129
Figure 82: Location of USB Connector....129
Figure 83: CPS Settings to Configure SLR 5000 Series Repeater for Analog Mode.... 141
Figure 84: Model Zetron 38 Repeater Panel.... 141
Figure 85: Signal Connections between SLR 5000 Series Repeater and Community Repeater Panel.... 142
Figure 86: CPS Configuration for Community Repeater Panel (1 of 2)....143
Figure 87: CPS Configuration for Community Repeater Panel (2 of 2)....144
Figure 88: Zetron Model 30 Phone Patch....145
Figure 89: Signal Connections between SLR 5000 Series Repeater and Zetron Model 30 Phone Patch (Analog Phone Patch Cable & Digital Phone Patch Cable).... 146
Figure 90: CPS Configuration for Phone Patch (1 of 2).... 147
Figure 91: CPS Configuration for Phone Patch (2 of 2).... 147
Figure 92: Model L3276 Tone Remote Adapter.... 148
Figure 93: Signal Connections between SLR 5000 Series Repeater and Motorola Solutions L3276 25-Pin connector for a 15 Channel Remote Control....149
Figure 94: CPS Configuration for L3276 Tone Remote Adapter (For a 15 Channel Remote Control).... 150
Figure 95: Model Trident’s Marauder.... 151
Figure 96: Model Trident’s Raider.... 152
Figure 97: Model Trident’s NTS....152
Figure 98: Signal connections between SLR 5000 Series Repeater, Trident Model Raider, Marauder, and NTS....153
Figure 99: CPS Configuration for Trident Model Raider, Marauder and NTS.... 154
Figure 100: Reference Frame for the Point of Interest (POI) Cylindrical Co-Ordinates.... 156
Figure 101: Schematic of the Ground-Level Exposure Model Adopted for the Assessment....158
Figure 102: Compliance Boundary for General Public (GP) and Ocupational (OCC) Exposure....160

This page intentionally left blank.

List of Tables

Table 1: Callout Legend..... 38
Table 2: Callout Legend..... 38
Table 3: Callout Legend..... 39
Table 4: Callout Legend..... 39
Table 5: SLR 5000 Series Frequency Ranges and Power Levels..... 41
Table 6: SLR 5000 Series Repeater General Specifications (All Bands)..... 41
Table 7: SLR 5000 Series Repeater Specifications..... 42
Table 8: Front Panel LED indicators..... 45
Table 9: SLR 5000 Series Front Panel LED Definitions..... 46
Table 10: Callout Legend..... 52
Table 11: Specifications of Receiver Subsystem..... 53
Table 12: Specifications of Transmitter Exciter Subsystem..... 54
Table 13: Callout Legend..... 60
Table 14: Specifications of Power Amplifier..... 60
Table 15: Callout Legend..... 64
Table 16: Callout Legend..... 64
Table 17: Power Supply AC Performance Specifications..... 64
Table 18: Power Supply DC Performance Specifications..... 64
Table 19: Power Supply Battery Charger Performance Specifications..... 65
Table 20: Callout Legend..... 65
Table 21: Callout Legend 66
Table 22: Callout Legend..... 67
Table 23: Power Supply Output Cable SIgnalling..... 67
Table 24: Callout Legend..... 69
Table 25: Connector Type and Primary Function..... 71
Table 26: AC Power Inlet Connector..... 72
Table 27: Callout Legend..... 72
Table 28: DC Power Inlet/DC Charger Outlet Connector..... 73
Table 29: USB Connector..... 74
Table 30: Ethernet 1 Connector..... 74
Table 31: Ethernet 2 Connector..... 75
Table 32: Auxiliary Connector..... 76
Table 33: Frequency Reference..... 78
Table 34: Recommended Test Equipment..... 81
Table 35: Callout Legend..... 90
Table 36: Callout Legend..... 90

Table 37: SLR 5000 Series Exploded View Parts List.....115
Table 38: Torque Specifications for Nuts and Screws.....117
Table 39: Cabinet Models.....122
Table 40: Cabinet Slide..... 123
Table 41: Rack Models.....123
Table 42: Connector Type and Primary Function.....129
Table 43: Callout Legend..... 130
Table 44: EME Compliance Distances Based on Example UHF Evaluation.....155

List of Procedures

Verifying Transmitter Circuitry Procedure 84
Verifying Receiver Circuitry Procedure 86
Tuning the Reference Oscillator Alignment 90
Tuning the Rx Audio Level Set 91
Tuning the Tx Audio Level Set 92
Tuning the Modulation Limit (with no Tx Data and no PL) 93
Verifiying the Modulation Limit (with no Tx Data and no PL) 94
Tuning the Modulation Limit (with Tx Data or PL) 95
Changing to Battery Charger Only Mode 96
Disassembly – General 99
Protective Cover Disassembly 100
Front Housing Disassembly 100
Cable Disassembly 100
Fan Disassembly 101
Front Panel Disassembly 102
Power Supply Removal 102
Modem Removal 103
Power Amplifier Module Removal 103
Back Panel Removal 104
Back Panel Installation 105
Input Cable Installation 106
Power Amplifier Module Installation 108
Modem Installation 108
Power Supply Installation 110
Fan Installation 111
Front Panel Installation 112
Cable Installation 112
Front Housing Installation 114
Protective Cover Installation 115
Installing Racks 127

This page intentionally left blank.

Related Publications

Related Publications	Part No.
MOTOTRBO SLR 5000 Series Quick Start Guide	MN001443A01

This page intentionally left blank.

Summary of Bands Available

Table below lists the SLR 5000 Series Repeater bands available in this manual. For details, see Model Charts section.

Frequency Band	Bandwidth	Power Level
VHF	136–174 MHz	1–50 W
UHF R1	400–470 MHz	1–50 W
UHF R2	450–527 MHz	1–50 W

This page intentionally left blank.

Notice

Commercial Warranty

Limited Warranty

MOTOROLA COMMUNICATION PRODUCTS

I. What This Warranty Covers And For How Long

MOTOROLA SOLUTIONS INC. (“MOTOROLA”) warrants the MOTOROLA manufactured Communication Products listed below (“Product”) against defects in material and workmanship under normal use and service for a period of time from the date of purchase as scheduled below:

Repeater	Two (2) Years
Product Accessories	One (1) Year

Motorola, at its option, will at no charge either repair the Product (with new or reconditioned parts), replace it (with a new or reconditioned Product), or refund the purchase price of the Product during the warranty period provided it is returned in accordance with the terms of this warranty. Replaced parts or boards are warranted for the balance of the original applicable warranty period. All replaced parts of Product shall become the property of MOTOROLA.

This express limited warranty is extended by MOTOROLA to the original end user purchaser only and is not assignable or transferable to any other party. This is the complete warranty for the Product manufactured by MOTOROLA. MOTOROLA assumes no obligations or liability for additions or modifications to this warranty unless made in writing and signed by an officer of MOTOROLA. Unless made in a separate agreement between MOTOROLA and the original end user purchaser, MOTOROLA does not warrant the installation, maintenance or service of the Product.

MOTOROLA cannot be responsible in any way for any ancillary equipment not furnished by MOTOROLA which is attached to or used in connection with the Product, or for operation of the Product with any ancillary equipment, and all such equipment is expressly excluded from this warranty. Because each system which may use the Product is unique, MOTOROLA disclaims liability for range, coverage, or operation of the system as a whole under this warranty.

II. General Provisions

This warranty sets forth the full extent of MOTOROLA's responsibilities regarding the Product. Repair, replacement or refund of the purchase price, at MOTOROLA's option, is the exclusive remedy. THIS WARRANTY IS GIVEN IN LIEU OF ALL OTHER EXPRESS WARRANTIES. IMPLIED WARRANTIES, INCLUDING WITHOUT LIMITATION, IMPLIED WARRANTIES OF MERCHANTABILITY AND FITNESS FOR A PARTICULAR PURPOSE, ARE LIMITED TO THE DURATION OF THIS LIMITED WARRANTY. IN NO EVENT SHALL MOTOROLA BE LIABLE FOR DAMAGES IN EXCESS OF THE PURCHASE PRICE OF THE PRODUCT, FOR ANY LOSS OF USE, LOSS OF TIME, INCONVENIENCE, COMMERCIAL LOSS, LOST PROFITS OR SAVINGS OR OTHER INCIDENTAL, SPECIAL OR CONSEQUENTIAL DAMAGES ARISING OUT OF THE USE OR INABILITY TO USE SUCH PRODUCT, TO THE FULL EXTENT SUCH MAY BE DISCLAIMED BY LAW.

III. State Law Rights

SOME STATES DO NOT ALLOW THE EXCLUSION OR LIMITATION OF INCIDENTAL OR CONSEQUENTIAL DAMAGES OR LIMITATION ON HOW LONG AN IMPLIED WARRANTY LASTS, SO THE ABOVE LIMITATION OR EXCLUSIONS MAY NOT APPLY.

This warranty gives specific legal rights, and there may be other rights which may vary from state to state

IV. How To Get Warranty Service

You must provide proof of purchase (bearing the date of purchase and Product item serial number) in order to receive warranty service and, also, deliver or send the Product item, transportation and insurance prepaid, to an authorized warranty service location. Warranty service will be provided by Motorola through one of its authorized warranty service locations. If you first contact the company which sold you the Product, it can facilitate your obtaining warranty service. You can also .

V. What This Warranty Does Not Cover

Defects or damage resulting from use of the Product in other than its normal and customary manner.

Defects or damage from misuse, accident, water, or neglect.

Defects or damage from improper testing, operation, maintenance, installation, alteration, modification, or adjustment.

Breakage or damage to antennas unless caused directly by defects in material workmanship.

A Product subjected to unauthorized Product modifications, disassemblies or repairs (including, without limitation, the addition to the Product of non-Motorola supplied equipment) which adversely affect performance of the Product or interfere with Motorola's normal warranty inspection and testing of the Product to verify any warranty claim.

Product which has had the serial number removed or made illegible.

Freight costs to the repair depot.

A Product which, due to illegal or unauthorized alteration of the software/firmware in the Product, does not function in accordance with MOTOROLA’s published specifications or the FCC type acceptance labeling in effect for the Product at the time the Product was initially distributed from MOTOROLA.

Scratches or other cosmetic damage to Product surfaces that does not affect the operation of the Product.

Normal and customary wear and tear.

VI. Patent And Software Provisions

MOTOROLA will defend, at its own expense, any suit brought against the end user purchaser to the extent that it is based on a claim that the Product or parts infringe a United States patent, and MOTOROLA will pay those costs and damages finally awarded against the end user purchaser in any such suit which are attributable to any such claim, but such defense and payments are conditioned on the following:

that MOTOROLA will be notified promptly in writing by such purchaser of any notice of such claim;

that MOTOROLA will have sole control of the defense of such suit and all negotiations for its settlement or compromise; and

should the Product or parts become, or in MOTOROLA's opinion be likely to become, the subject of a claim of infringement of a United States patent, that such purchaser will permit MOTOROLA, at its option and expense, either to procure for such purchaser the right to continue using the Product or parts or to replace or modify the same so that it becomes noninfringing or to grant such purchaser a credit for the Product or parts as depreciated and accept its return. The depreciation will be an equal amount per year over the lifetime of the Product or parts as established by MOTOROLA.

MOTOROLA will have no liability with respect to any claim of patent infringement which is based upon the combination of the Product or parts furnished hereunder with software, apparatus or devices not furnished by MOTOROLA, nor will MOTOROLA have any liability for the use of ancillary equipment or software not furnished by MOTOROLA which is attached to or used in connection with the Product. The foregoing states the entire liability of MOTOROLA with respect to infringement of patents by the Product or any parts thereof.

Laws in the United States and other countries preserve for MOTOROLA certain exclusive rights for copyrighted MOTOROLA software such as the exclusive rights to reproduce in copies and distribute copies of such Motorola software. MOTOROLA software may be used in only the Product in which the software was originally embodied and such software in such Product may not be replaced, copied, distributed, modified in any way, or used to produce any derivative thereof. No other use including, without limitation, alteration, modification, reproduction, distribution, or reverse engineering of such MOTOROLA software or exercise of rights in such MOTOROLA software is permitted. No license is granted by implication, estoppel or otherwise under MOTOROLA patent rights or copyrights.

VII. Governing Law

This Warranty is governed by the laws of the State of Illinois, USA.

This page intentionally left blank.

Chapter 1

SLR 5000 Series Repeater

1.1
Notations Used in This Manual

Throughout the text in this publication, there are WARNING, CAUTION, and Note notations. These notations are used to emphasize that safety hazards exist, and due care must be taken and observed.

NOTICE: An operational procedure, practice, or condition which is essential to emphasize.

CAUTION: CAUTION indicates a potentially hazardous situation which, if not avoided, **might** result in equipment damage.

WARNING: WARNING indicates a potentially hazardous situation which, if not avoided, **could** result in death or injury.

Symbol indicates areas of the product that pose potential burn hazards.

1.2
Description

The Motorola Solutions SLR 5000 Series Repeater provides a modular, flexible analog and digital station designed for today's communication systems and for the future.

The station is available for use in these configurations:

- Analog Conventional
- Digital (MOTOTRBO)
  - MOTOTRBO DMR Tier 2 Conventional – Single Site
  - MOTOTRBO DMR Tier 2 Conventional – IP Site Connect
  - MOTOTRBO Capacity Plus Trunking
  - MOTOTRBO Connect Plus Trunking
  - MOTOTRBO Digital Voting
- LTR Trunking
- Passport Trunking
- MPT1327 Trunking

NOTICE: Certain software features enabled through the CPS can be configured with the Online Help or with a regional representative. Refer to the regional Ordering Guide to determine the features available within the respective regions.

The SLR 5000 series can either be configured as a stand-alone repeater or as a repeater connected to a back-end network, as in the case of operating in IP Site Connect mode. As a repeater, it listens on one uplink frequency, and then re-transmits on a downlink frequency, thus providing the RF interface to the field subscribers. When configured for analog station operation, the repeater is designed to operate with most existing analog systems, which enables a smooth migration to the MOTOTRBO system.

When configured for digital operation, the repeater offers additional services. The digital repeater operates in TDMA mode, which essentially divides one channel into two virtual channels using time

slots; therefore the user capacity is doubled. The repeater utilizes embedded signaling to inform the field radios of the busy/idle status of each channel (time slot), the type of traffic, and even the source and destination information.

The SLR 5000 series facilitates the field replaceable unit (FRU) concept of field repair to maximize system uptime. The FRU concept also aids in allowing the end user/maintainer to lower their inventory costs. The base model SLR 5000 series FRUs are as follows:

- Modem FRU
- Power Amplifier FRU
- Power Supply FRU
- Front Panel FRU

See Figure 1: Front view of the SLR 5000 Series Repeater on page 38 for the front view and Figure 2: Rear view of the SLR 5000 Series Repeater on page 38 for the rear view of SLR 5000 series repeater. Figure 3: Front view (without top cover) of the SLR 5000 Series Repeater on page 39 shows the front view portion of the repeater without the top cover and Figure 4: Front view (without top and bottom covers and front panel) of the SLR 5000 Series Repeater on page 39 shows the front view portion of the repeater without the top cover, bottom cover, and front panel.

Figure 1: Front view of the SLR 5000 Series Repeater

Table 1: Callout Legend

Label	Description
1	Front Panel LED Indicators
2	USB Port

Figure 2: Rear view of the SLR 5000 Series Repeater

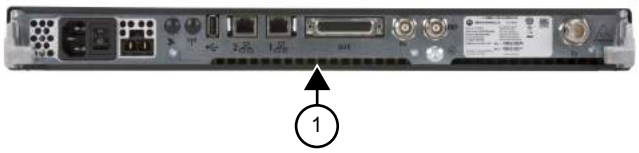

Table 2: Callout Legend

Label	Description
1	Back Panel Interface Connectors and Power Switch

Figure 3: Front view (without top cover) of the SLR 5000 Series Repeater

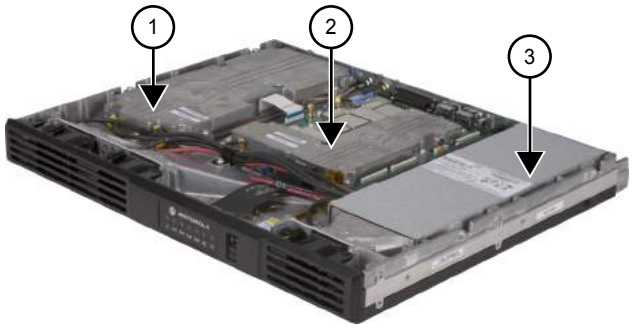

Table 3: Callout Legend

Label	Description
1	Power Amplifier Module
2	Modem Module
3	Power Supply Module

Figure 4: Front view (without top and bottom covers and front panel) of the SLR 5000 Series Repeater

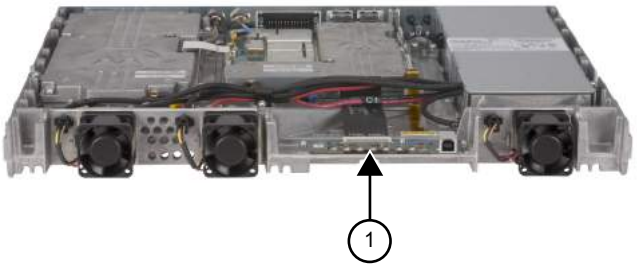

Table 4: Callout Legend

Label	Description
1	Front Panel Board

1.3

Operating Features

The following are the standard features of an SLR 5000 series model:

- MOTOTRBO Conventional Operation (2-Slot TDMA, 4FSK Modulation)
- Analog Conventional Operation (FM)
- Continuous Duty Cycle Operation over -30 °C to +60 °C
- Meets or exceeds the following standards:
  - TIA603D
  - ETSI EN 300 086
  - ETSI EN 300 113

- ETSI TS 102 361-1 Part 1: DMR Air Interface Protocol
- ETSI TS 102 361-2 Part 2: DMR Voice and Generic Services and Facilities
- ETSI TS 102 361-3 Part 3: DMR Packet Data Protocol
- ETSI TS 102 361-4 Part 4: DMR Trunking Protocol
- California Energy Commission (CEC) - Compliant to Title 20 Appliance Efficiency Regulations when operated in Battery Charger Only mode with Sprinter Battery S12V370. Charge time may take up to 40 hr.

- AMBE +2™ Digital VOCODER
- Synthesized Frequency Generation
- Female N-type Antenna Connector (Tx)
- Female BNC Antenna Connector (Rx)
- Ethernet Port (Network)
- Front-mounted USB Port (Service)
- 12 configurable GPIO ports (Digital)
- 4 configurable GPI ports (Analog)
- 2 configurable GPO ports (Analog)
- Power for third-party controllers (1 A)
- 1.5 PPM Frequency Stability (Temperature and 1-Year Aging) (VHF and UHF)
- External Reference Capability
- Switching Power Supply operates from 85–264 VAC (47–63 Hz)
- Multi-Power Source configurable (AC, DC, or AC with Battery Revert)
- Integrated 3 A battery charger
- Station Diagnostic Tests – Fixed Set of Tests run upon Start-up
- Physical Dimensions: 1.75 in. H x 19 in. W x 14.6 in. D (44 x 483 x 370 mm) 1RU
- Weight: 19 lb (8.62 kg) excluding cabinet or other peripheral equipment

Motorola Solutions Network Interface:

- IP Site Connect
- Repeater Diagnostics and Control (RDAC)
- Capacity Plus
- Connect Plus

Third-Party Controller Interface:

- Phone Patch
- Multi-Coded Squelch Interface (Repeater Panel)
- Tone Remote Adapter
- LTR Trunking
- Passport Trunking
- MPT1327 Trunking

NOTICE: The SLR 5000 series repeater only supports the third-party controllers noted above when it is configured in analog mode. The exception is phone patch in digital mode.

In addition, the following features are also included. These features are shipped in a preset condition, but may be altered through the use of the CPS.

- 64 Tx/Rx Frequencies – Factory Programmed with 1 Tx, 1 Rx
- 12.5 kHz or 25 kHz Operation – Factory Programmed to 12.5 kHz
- 1 Tx and 1 Rx (PL or DPL) Squelch Code per channel – Factory Programmed to CSQ
- Base Station Identification (BSI) – Factory Programmed as "BLANK" ("BLANK" disables BSI)
- Push-To-Talk (PTT) Priority – Factory Programmed to Repeat Path

1.4 Frequency Ranges and Power Levels

The SLR 5000 Series Repeater is available in the following frequency ranges and power levels table.

Table 5: SLR 5000 Series Frequency Ranges and Power Levels

Frequency Band	Bandwidth	Power Level
VHF	136–174 MHz	1–25 W 1–50 W
UHF R1	400–470 MHz	1–25 W 1–50 W
UHF R2	450–527 MHz	1–50 W

1.5 Specifications

Specifications of the SLR 5000 series repeater are available in the following tables.

Table 6: SLR 5000 Series Repeater General Specifications (All Bands)

Parameter	Specifications
Number of Channels	64
Frequency Generation	Synthesized
Input Voltage AC	100–240 VAC (47–63 Hz)
Input Voltage DC	11.0–14.4 VDC
Power Supply Type	Switching
Station Weight	19 lbs (8.62 kg)
Temperature Range	-30 °C to +60 °C (-22 °F to +140 °F)
Humidity Range	RH of 95%, non-condensing at 50 °C (122 °F)
Antenna Connectors	Tx: N-Type, Rx: BNC
Modes of Operation	Half-Duplex/Duplex
Rack Unit	1
Height	1.75 in. (44 mm)
Width	19 in. (483 mm)
Depth	14.6 in. (370 mm)

Table 7: SLR 5000 Series Repeater Specifications

Parameter	Specifications	
	VHF	UHF
Input Power (All Modulations)		
Standby (AC Line 117 V/220 V)	0.18 A/0.25 A	
50 W Transmit at Rated Power (AC Line 117 V/220 V)	1.5 A/0.9 A	
Standby (13.6 VDC)	0.73 A	
50 W Transmit at Rated Power (13.6 VDC)	9.5 A	
Frequency Reference		
Internal Frequency Stability (PPM)	±0.5 PPM (temperature)	
External Reference Capable	Yes	
Frequency Bands		
Electronic Bandwidth	136–174 MHz	UHF R1, 400–470 MHz UHF R2, 450–527 MHz
Receiver		
Selectivity 25 kHz/12.5 kHz (TIA603D)	83 dB/55 dB	80 dB/55 dB
Selectivity 25 kHz/12.5 kHz (TIA603)	83 dB/68 dB	80 dB/55 dB
Selectivity 25 kHz/12.5 kHz (ETSI)	70 dB/63 dB	
Sensitivity (12 dB SINAD)	0.22 uV	
Sensitivity (5% BER)	0.22 uV	
Intermodulation Rejection (TIA603D)	82 dB	
Intermodulation Rejection (ETSI)	73 dB	
Spurious Rejection (TIA603D)	95 dB	
Spurious Rejection (ETSI)	90 dB	
Conducted Spurious Emissions	-57 dBm	
Audio Distortion	<1%	
Audio Response	Per TIA/ETSI	
FM Hum and Noise 25 kHz/12.5 kHz	-50 dB/-45 dB	
Transmitter		
Rated Output Power (Continuous Duty)	1–50 W	
Intermodulation Attenuation	40 dB	
Adjacent Channel Power 25 kHz/12.5 kHz	78 dB/62 dB	
Modulation Fidelity (4FSK)	FSK Error 5%, FSK Magnitude 1%	
Wideband Noise (1 MHz) @ Rated Pout	-152 dBc/Hz	

Table continued…

[1] Typical performance under the following conditions (when applicable): Battery charging disabled and nominal VSWR conditions (VSWR <1.5:1)

Parameter	Specifications	
	VHF	UHF
Rated System Deviation	±2.5 kHz @ 12.5 kHz, ±5.0 kHz @ 25 kHz	
Spurious Harmonics and Emissions	-36 dBm < 1 GHz, -30 dBm > 1 GHz	
Audio Distortion	< 1%	
Audio Response	Per TIA/ETSI	
FM Hum and Noise 25 kHz/12.5 kHz	-50 dB/-45 dB	
FCC Identifier	ABZ99FT3094	UHF R1, ABZ99FT4096 UHF R2, ABZ99FT4097
FCC Emission Designators	11K0F3E, 16K0F3E, 7K60FXD, 7K60F7D, 7K60FXE, 7K60F7E, and 7K60F7W,	
Industry Canada • IC certification/registration number • IC model number • Tx/Rx Frequency range	109AB-99FT3094 SLR 5000-VHF Tx: 138–174 MHz Rx: 138–174 MHz	109AB-99FT4096 SLR 5000-UHF R1 Tx: 406.1–430 MHz and 450–470 MHz Rx: 406.1–430 MHz and 450–470 MHz 109AB-99FT4097 SLR 5000-UHF R2 Tx: 450–470 MHz Rx: 450–470 MHz

All specifications noted above are in accordance to their respective TIA603D, ETSI EN 300 086, and ETSI EN 300 113 standards unless otherwise noted.

1.6 Theory of Operation

The SLR 5000 series repeater provides the radio frequency (RF) link between the repeater and the subscriber radios.

The repeater acquires inbound signals via its external receive (Rx) antenna and then amplifies, filters and demodulates the signals into data or voice packets. From that point, the data is either forwarded to the repeater's transmitter to subscriber radios, and/or the data is delivered via a wired interface for distribution to networked repeaters, consoles, or other networked infrastructure.

The SLR 5000 series repeater consists of a Modem, Power Amplifier (PA), Front Panel and Power Supply (PS). These modules are also known as field replaceable units (FRU).

- The Modem module is comprised of three subsystems, which are the Receiver subsystem, Exciter subsystem, and Station Control subsystem. At a high level, these subsystems are further explained as follows:
  - The Receiver subsystem is a dual heterodyne Receiver which receives the RF signal from the subscriber's transmitter. It then converts the resulting final intermediate frequency (IF) from an analog signal to that of a digital word in IQ signal format. Finally, the Receiver delivers the IQ signal, via the SSI bus, to the Station Control subsystem for demodulation. Additionally, the Receiver subsystem also provides for its own metering and diagnostics via software, as well as self-contained calibration (no field tuning is needed for the Receiver subsystem).

- The Exciter subsystem converts a two-port base band data signal, sent over the SSI bus from the Station Control subsystem, to an analog signal representation. The analog signal is then modulated with a low power RF transmitter carrier that is generated by the Exciter subsystem. The power modulated RF carrier is then amplified and delivered to the PA at an intermediate level of approximately +36 dBm for further amplification. The Exciter subsystem and PA constitute the transmitter of the SLR 5000 series repeater. Additionally, the Exciter subsystem also provides its own metering and diagnostics via software, as well as a self-contained calibration (no field tuning is needed for the Exciter subsystem).
- The heart of the Station Control subsystem is the Texas Instruments DM8148 Host/ DSP processor. In general, the SCM controls the entire coordination of the repeater functions. Specifically, the Station Control subsystem provides for the following functionalities:
  + Contains and runs the preloaded repeater software
  + Manages inbound and outbound RF and Audio traffic
  + Provides an on-board USB port for local configuring, alignment and diagnostics via the following applications:
    - Customer Programming Software (CPS)
    - Tuner application
    - Repeater Diagnostic and Control (RDAC) software
  + Provides an Ethernet port for IP site connectivity and remote RDAC
  + Provides GPIO connectivity for third party controller interfaces
  + Provides for analog repeater audio connectivity
  + Data and Control to the Receiver subsystem via the SPI and SSI respectively
  + Data and Control to the Exciter subsystem via the SPI and SSI respectively
  + Control of the PA’s set power via the SPI
  + Configuration and fault management of all subsystems including the PS and PA
  + Generates the internal station reference
  + Provides control of the front panel module’s indicator LEDs.
- The PA module amplifies the intermediate level modulated RF signal from the Modem. It then delivers the amplified signal to the transmitter antenna port at a power level within the rated power band of the repeater, for transmission to the subscriber radios. In addition to its primary task of amplification, the PA provides the following hardware functions for the repeater.
  + Harmonic attenuation
  + Inter-modulation attenuation (IMA) suppression
  + VSWR detection
  + RF power control (primary means)
  + Meters for diagnostics
  + Power rollback for temperature, VSWR, and voltage
  + Self-Contained calibration (no field alignment is needed for PA)
- The Front Panel module provides LED indications for general assessment of the status and operational condition of the repeater. Additionally, the front panel also provides a USB service port for configuration and alignment of the repeater.
- The PS Module provides DC power to the Modem, PA and Front Panel. It can also be used to provide auxiliary power (nominal 13.6 VDC) to a number of third party controllers. Additionally, it can operate in three different input modes:

+ AC Input Only
+ DC Input Only
+ AC with Battery Revert

In addition to providing power to the noted FRU and controllers, the PS also provides the following:

- AC Failure detect signaling to the Modem
- Output over-current protection
- Integrated 2 stage 3 amp battery charger

Further details can be found in the individual sections of the respective FRU chapters of this manual.

1.7 Basic Repeater Level Troubleshooting – RDAC and LEDs

Diagnostic tests are available for the Modem, PA, and Power Supply Modules. If a problem occurs during station operation, it is logged as an alarm that is read with the Repeater Diagnostic and Control application (RDAC).

Figure 5: RDAC Diagnostic Screen

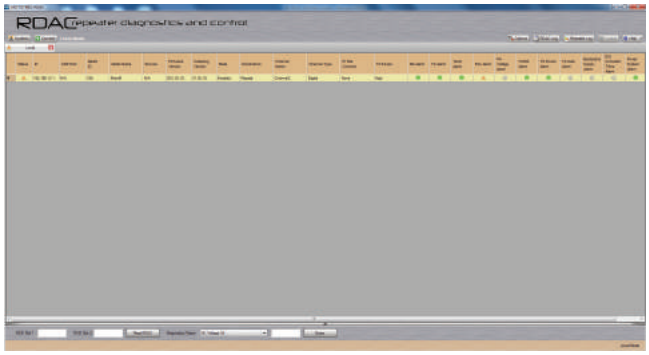

The station operator will then evaluate the problem locally or remotely, as the station maintains an Alarm Log with the name of the alarm that has failed since the last power up. Via the RDAC application's Alarm Log, the alarm messages will aid in identifying the FRU that failed along with the fault condition.

After booting up the repeater, the seven LEDs (Power/Status, Tx Slot 1, Tx Slot 2, Rx Slot 1, Rx Slot 2, Network, and Reference LEDs) will flash in unison.

The general status and condition of the SLR 5000 series repeater can be obtained by observing the seven LED indicators on the front panel. Table 8: Front Panel LED indicators on page 45 shows the LED symbols and their meaning, while Table 9: SLR 5000 Series Front Panel LED Definitions on page 46 identifies the information conveyed via the LED indicators.

Table 8: Front Panel LED indicators

LED	Definition
	Status
Tx A	Tx Slot 1
Rx A	Rx Slot 1

Table continued…

LED	Definition
Tx B	Tx Slot 2
Rx B	Rx Slot 2
	Ethernet Link/Network Connectivity
	Reference

Table 9: SLR 5000 Series Front Panel LED Definitions

LED Function Name	LED Color	LED State	Status Indication
Power/Status	Off	Off	Off
	Green	Flashing	Operating Normally, with DC power
		Solid	Operating Normally, with AC power
	Red	Flashing	Repeater is Disabled (by customer)
		Solid	Not Operational – Major Alarm
	Amber	Flashing[2]	Check Alarm Log – Alarm occurred and cleared but remains latched (configurable)
		Solid	Repeater Operational – Minor Alarm
Tx A	Off	Off	Transmitter is not transmitting
	Green	Solid	Tx slot A or Analog (at desired power)
	Amber [2]	Solid	Tx slot A or Analog (at less than desired power)
	Red [2]	Solid	Tx Fail
		Flashing	Tx Inhibit
Rx A	Off	Off	No receive carrier detected
	Green	Solid	Rx Slot A or Analog (qualifier met)
	Amber [2]	Solid	Rx Slot A or Analog (non-qualified)
Tx B	Off	Off	Transmitter is not transmitting
	Green	Solid	Tx slot B or Analog (at desired power)
	Amber [2]	Solid	Tx slot B or Analog (at less than desired power)
	Red [2]	Solid	Tx Fail
		Flashing	Tx Inhibit
Rx B	Off	Off	No receive carrier detected
	Green	Solid	Rx Slot B or Analog (qualifier met)
	Amber [2]	Solid	Rx Slot B or Analog (non-qualified)

Table continued…

[2] Not supported in initial release.

LED Function Name	LED Color	LED State	Status Indication
Ethernet/Network Connectivity	Off	Off	No Ethernet connection
	Green	Solid	Connectivity/Linked
		Flashing	Attempting to connect to the system
Reference	Off	Off	No External Reference is present
	Green	Solid	Locked to External Reference (1 pps [2], 5 MHz, 10 MHz)

NOTICE:
All LEDs flashing in unison indicate the repeater is booting up.

The RDAC application will be needed when the Status LED is red (solid or flashing). This status indicates a minor or major alarm. The RDAC application is used to identify the specific alarm and probable diagnosis to aid in identifying the FRU at fault.

1.8 Repeater Model Numbering Scheme

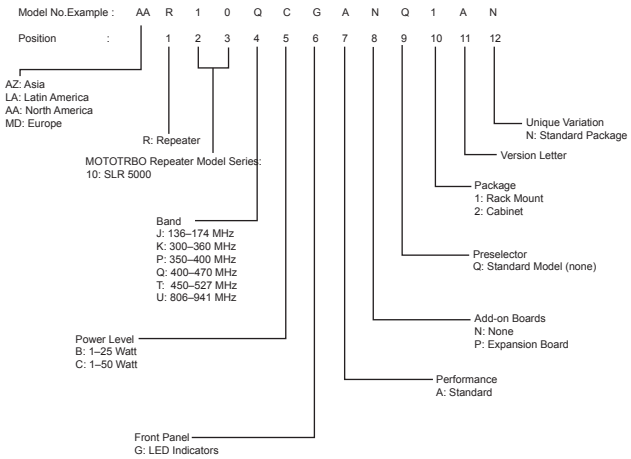

Figure 6: Repeater Model Numbering Scheme

1.9 Model Chart

1.9.1 VHF High Power

SLR 5700, VHF, 136–174 MHz	
Model/Item	**Description**
AAR10JCGANQ1AN	**136–174 MHz, 1–50 W SLR 5700 Repeater**
X PMTD4013_S	Modem Structure Kit/FRU
X PMTD4012_S	Power Amplifier Structure Kit/FRU
X PMPN4026_S	Power Supply Structure Kit/FRU

Table continued…

SLR 5700, VHF, 136–174 MHz	
Model/Item	**Description**
X PMLN6490_S	Front Panel Board Structure Kit/FRU
X 3087791G01	Power Cable, US
X MN001443A01	Quick Start Guide
x = Indicates compatibility with model(s)	

1.9.2
UHF R1 High Power

SLR 5700, UHF R1, 400–470 MHz	
Model/Item	**Description**
AAR10QCGANQ1AN	**400–470 MHz, 1–50 W SLR 5700 Repeater**
X PMTE4022_S	Modem Structure Kit/FRU
X PMTE4023_S	Power Amplifier Structure Kit/FRU
X PMPN4026_S	Power Supply Structure Kit/FRU
X PMLN6490_S	Front Panel Board Structure Kit/FRU
X 3087791G01	Power Cable, US
X MN001443A01	Quick Start Guide
x = Indicates compatibility with model(s)	

1.9.3
UHF R2 High Power

SLR 5700, UHF R2, 450–527 MHz	
Model/Item	**Description**
AAR10TCGANQ1AN	**450–527 MHz, 1–50 W SLR 5700 Repeater**
X PMTE4510_S	Modem Structure Kit/FRU
X PMTE4500_S	Power Amplifier Structure Kit/FRU
X PMPN4026_S	Power Supply Structure Kit/FRU
X PMLN6490_S	Front Panel Board Structure Kit/FRU
X 3087791G01	Power Cable, US
X MN001443A01	Quick Start Guide
x = Indicates compatibility with model(s)	

Chapter 2

SLR 5000 Series Satellite Receiver

2.1 Description

The main purpose of the Satellite Receiver is to eliminate "dead zones" in a communications system by improving the "talk-in" coverage on a particular receive frequency when used in a receiver voting system.

The Motorola Solutions SLR 5000 Series Repeater is not offered as an exclusive Satellite Receiver only model, rather the repeater can be configured through the CPS to operate as a Satellite Receiver in a receive only mode of operation. As such, the context of this chapter assumes that the repeater is configured as a Satellite Receiver.

NOTICE: Configuring the repeater as a Satellite Receiver is only compatible with the MOTOTRBO Digital Voting feature.

2.2 Operating Features

The features are identical to the SLR 5000 series repeater, with the exception that all transmitter related functions are not applicable. See Operating Features on page 39 for more details.

2.3 Frequency Ranges

The supported frequency ranges are identical to the SLR 5000 series repeater's receive frequency ranges. See Frequency Ranges and Power Levels on page 41 for more details.

2.4 Specifications

The specifications are identical to the SLR 5000 series repeater, with the exception that all transmitter related specifications are not applicable. See Specifications on page 41 for more details.

2.5 Configuration

Other than setting the general personality configurations, one must additionally set the “Operation Mode” parameter under the “General Settings” menu in the CPS to that of “Digital Satellite Receiver.”See Figure 7: “Operation Mode” configuration for Satellite Receiver Functionality on page 50 for the screenshot of the “Operation Mode” parameter.

Figure 7: “Operation Mode” configuration for Satellite Receiver Functionality

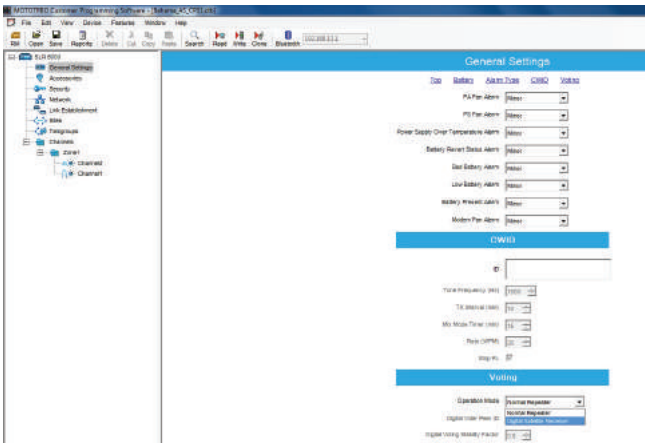

2.6 Basic Station Level Troubleshooting – RDAC and LEDs

The troubleshooting procedures are similar to the SLR 5000 series repeater with regards to the control, power supply, and receiver sub-systems. See Basic Repeater Level Troubleshooting – RDAC and LEDs on page 45 for more details.

NOTICE: When configured for receiver only operation, the SLR 5000 series repeater does not support any transmitter sub-system functions. As such, disregard all references to the transmitter section in Basic Repeater Level Troubleshooting – RDAC and LEDs on page 45. This includes any transmitter related topics in the RDAC and the front panel LEDs.

2.7 Model Chart

The model chart is identical to the SLR 5000 series repeater. See Model Chart on page 47 for more details.

Chapter 3

SLR 5000 Series Modem

3.1
Description

The Modem Module is described in this section. A general description, identification of inputs and outputs, and functional theory of operation are provided. The information provided is sufficient to give service personnel a functional understanding of the module, allowing maintenance and troubleshooting to the module level.

3.1.1
General Description

The Modem Module consists of a single printed circuit board in a clamshell housing assembly. It provides the receiver, exciter and station control functionality for the repeater. Additionally the external connections to the station are connected directly to the modem module.

NOTICE: The modem cooling fan is replaceable and external to the modem itself. See SLR 5000 Series Maintenance and Disassembly/Reassembly on page 97 for replacement details.

3.1.2
Input and Output Connections

The following figure shows the Modem Module input and output external connections.

Figure 8: Modem Module Connector Locations

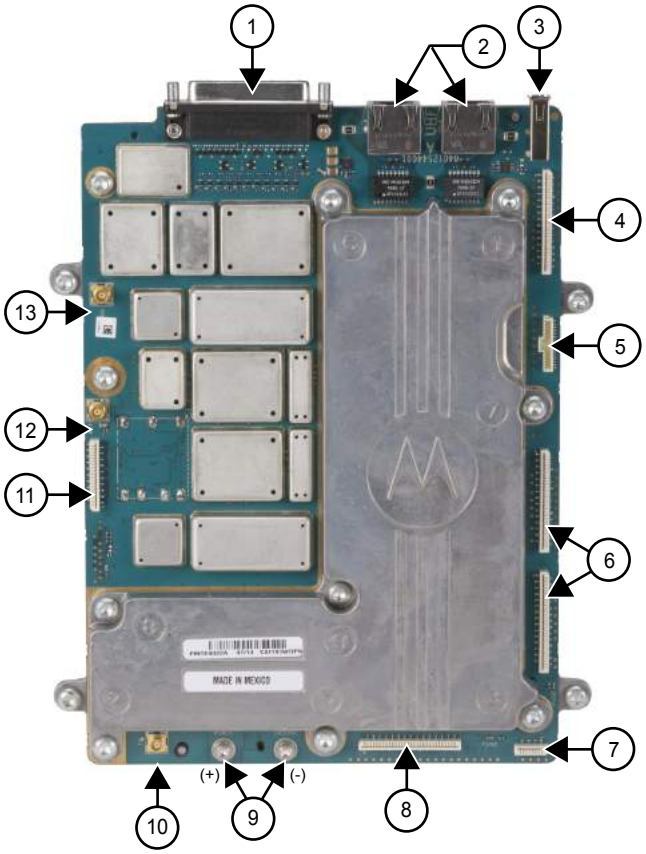

Table 10: Callout Legend

Label	Description
1	Auxiliary Connector
2	Ethernet Connectors
3	USB Host
4	Future Expansion Port
5	PSU Digital Interface
6	Future Expansion Ports
7	Chassis ID Connector
8	Front Panel Interface
9	DC Power Input
10	Tx Exciter Output
11	PA Digital Interface
12	External Reference Input
13	Receiver Input

3.1.3
Frequency Bands

The Modem Module covers the following bands with unique models:

- VHF
- UHF R1
- UHF R2

3.2
Receiver Subsystem

The Modem Module includes the receiver circuitry for the station. A cable connects the board connector to a BNC connector located on the rear panel of the repeater. See Figure 8: Modem Module Connector Locations on page 52 for the location of this connector. The receiver section performs highly-selective bandpass filtering and dual down-conversion of the desired RF signal. A custom Receiver IC then performs an analog-to-digital conversion of the desired received signal and outputs the digitized signal to the controller section via a serial synchronous interface. Included in the receiver section is:

- Frequency Synthesizer Circuitry – Consists of a phase-locked loop and Voltage-Controlled Oscillator (VCO), generates the first LO injection signal.
- Varactor-tuned Preselector Filter(s) – Provides bandpass filtering of the station Receiver RF input.
- Receiver Front End Circuitry – Performs filtering, amplification, and the first down conversion of the Receiver RF signal.
- Receiver-specific piece of transceiver IC Circuitry – Consists of receiver-specific parts of a transceiver IC which performs the second down conversion, filtering, amplification, and analog-to-digital conversion of the receive signal.
- Analog to Digital Converter (ADC) Circuitry – Converts analog Receiver status signals to digital format for transfer to the controller circuitry located on the Modem Module.

3.2.1
Specifications

Table 11: Specifications of Receiver Subsystem

Parameter	Specifications	
	VHF	UHF
Frequency Bands	136–174 MHz	UHF R1, 400–470 MHz UHF R2,450–527 MHz
Selectivity 25 kHz/12.5 kHz (TIA603D)	83 dB/55 dB	80 dB/55 dB
Selectivity 25 kHz/12.5 kHz (TIA603)	83 dB/68 dB	80 dB/68 dB
Selectivity 25 kHz/12.5 kHz (ETSI)	70 dB/63 dB	
Sensitivity (12 dB SINAD)	0.22 uV	
Sensitivity (5% BER)	0.22 uV	
Intermodulation Rejection (TIA603D)	82 dB	
Intermodulation Rejection (ETSI)	73 dB	

Table continued…

Parameter	Specifications	
	VHF	UHF
Spurious Rejection (TIA603D)	95 dB	
Spurious Rejection (ETSI)	90 dB	
Audio Distortion	<1%	
FM Hum and Noise 25 kHz/12.5 kHz	-50 dB/-45 dB	

3.3

Transmitter Exciter Subsystem

The Exciter Subsystem in the Modem Module (in conjunction with the Power Amplifier Module) provides the transmitter functions for the station. The Exciter circuitry generates a low-level modulated Radio Frequency (RF) signal which is input to the Power Amplifier (PA) module for further amplification and output to the transmit antenna. A coaxial cable is used to connect the Tx exciter output to the PA module. See Figure 8: Modem Module Connector Locations on page 52 for the exact location of this connector. The Exciter Module interfaces directly with the controller section, which provides control signals and monitoring, and routes transmit data to the Exciter.

The RF carrier is generated by a frequency synthesizer consisting of synthesizer circuitry and Voltage-Controlled Oscillator (VCO) circuitry. Exciter circuit control signals, monitoring, and audio processing are handled by the controller section of the Modem Module. The power leveling circuitry of the transmitter system is located in the Power Amplifier Module and passed onto the exciter stages through the PA-Modem interface flex cable. See Figure 8: Modem Module Connector Locations on page 52 for the location. Included in the exciter section are:

- Frequency Synthesizer Circuitry – Consists of a phase-locked loop and Voltage-Controlled Oscillator (VCO), generates a modulated RF signal at the transmitter carrier frequency.
- RF Isolation Switch – Allows the controller section to turn on/off the Exciter RF input signal which greatly reduces the signal supplied to the Power Amplifier module.
- Analog to Digital Converter (ADC) Circuitry – Converts the analog Exciter status signals to the digital format for transfer, upon request, to the controller section of the Modem Module.
- Low Level Amplifiers – Amplify and buffer the modulated RF signal from the VCO for delivery to the Power Amplifier Module.

3.3.1

Specifications

Table 12: Specifications of Transmitter Exciter Subsystem

Parameter	Specifications	
	VHF	UHF
Frequency Range	136–174 MHz	UHF R1, 400–470 MHz UHF R2, 450–527 MHz
Electronic Bandwidth	Full Bandwidth	
Output Power	6 W	6.2 W
Harmonics	-20 dBc	

3.4

Station Control Subsystem

The Station Control Subsystem is described in this section. A general description, identification of controls, indicators, and inputs/outputs, a functional block diagram, and functional theory of operation are provided.

The Controller circuitry performs the digital signal processing, data formatting and audio routing for the station and provides the external interfaces to the rest of the site.

The Controller section consists of 7 main ICs. These are:

- Texas Instrument DM8148 Host/DSP Processor
- EMMC Flash memory
- DDR3 memory
- Texas Instruments Power Management IC
- NOR Flash
- 2-TI AIC3204 Codecs

General controller functionality includes:

- Data and Control interface to the transceiver ICs
- Audio interface with CODEC ICs
- UART interface to expansion board
- Intermodule communication (SPI, I2C)
- Two Ethernet ports
- USB Device port
- USB Host port
- External physical interfaces (connectors, LEDs, external references etc.)
- Station Reference Control

3.4.1

High Stability Reference Block

The high-stability reference block can be used to enhance the 0.5 ppm Voltage Controlled Temperature Compensated Crystal Oscillator. The block diagram shown in Figure 9: High Stability Reference Circuit on page 55. An external reference can be applied to lock the on board VCTCXO. This function can be enabled via the customer programming software. The connection is made through a cable connecting a BNC connector on the rear panel to a connector on the modem module. The location of the connector on the modem module can be found in Figure 8: Modem Module Connector Locations on page 52.

Figure 9: High Stability Reference Circuit

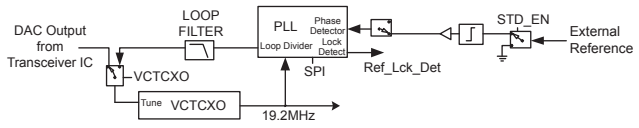

3.4.2

Audio

The analog audio stages are used exclusively for external accessories connected through the rear DB25 accessory connector.

The critical components of the audio circuit are the TI DM8148 processor and a pair of Texas Instruments AIC3204 dual channel audio codecs. Figure 10: Audio Block Diagram on page 56 details the specific interconnects between the critical components.

Figure 10: Audio Block Diagram

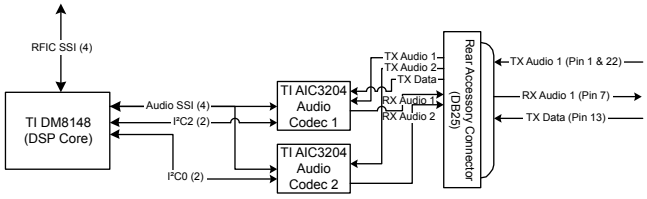

The repeater digital audio is handled primarily by the DM8148 processor. The TX RFIC generates a 24.576 MHz master clock (MCLK) that the DM8148 uses to drive its McASP SSI interface for the audio codecs. The bulk of the audio processing is done in the DaVinci's DSP core. The audio codecs contain DACs and ADCs and handle the conversion of the digital audio to analog audio and vice versa.

There are 2 TX audio lines routed in from the rear accessory connector. These are TX Audio 1 (Pins 1 and 22, used for analog and slot 1 digital), and TX Data (Pin 13).

For the RX outputs, there is only 1 which is connected to the accessory connector. RX Audio 1 on pin 7 (to be used for analog and slot 1 digital).

3.5 Station Control Interface

3.5.1 Front Panel Interface Connector

Refer Modem Interface on page 70 for details.

3.5.2 Rear Panel Connections

Refer USB on page 73 to Auxiliary (Aux) on page 75 for details.

3.5.3 Power Amplifier Interface Connector

The digital interface to the power amplifier module utilizes a 20 pin vertical LIF connector. See Figure 8: Modem Module Connector Locations on page 52 for the locations of these connectors. Figure 11: Power Amplifier Interface Connector Pin Locations on page 56 shows the pin number locations.

Figure 11: Power Amplifier Interface Connector Pin Locations

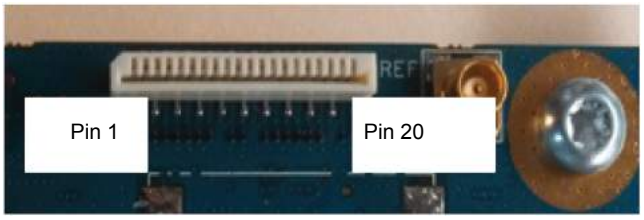

3.5.4
Power Supply Interface Connector

The power supply digital interface utilizes a 15 pin Pico-ClaspTM connector. The location is detailed in Figure 8: Modem Module Connector Locations on page 52. Figure 12: Power Supply Interface Connector Pin Locations on page 57 shows the pin number locations.

Figure 12: Power Supply Interface Connector Pin Locations

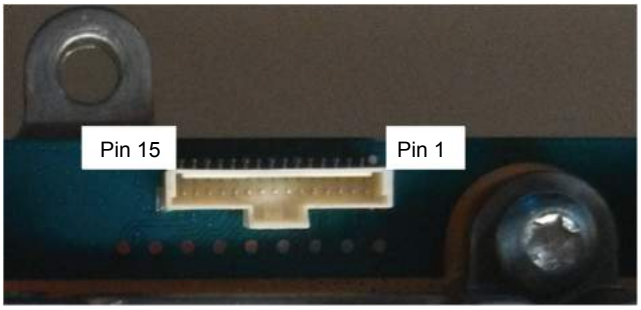

3.5.5
Expansion Board Interface Connector

The expansion board interface utilizes a 30 pin vertical LIF connector. The location is detailed in Figure 8: Modem Module Connector Locations on page 52. Figure 13: Expansion Board Interface Connector Pin Locations on page 57 shows the pin number locations.

Figure 13: Expansion Board Interface Connector Pin Locations

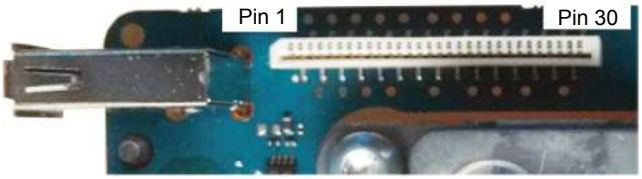

3.5.6
Chassis ID Interface Connector

The Chassis ID utilizes an 8 pin vertical LIF connector. The location is detailed in Figure 8: Modem Module Connector Locations on page 52.
Figure 14: Chassis ID Interface Connector Pin Locations on page 58 shows the pin number locations. The repeater chassis information is necessary for warranty and purchased software features so this must be connected.

Figure 14: Chassis ID Interface Connector Pin Locations

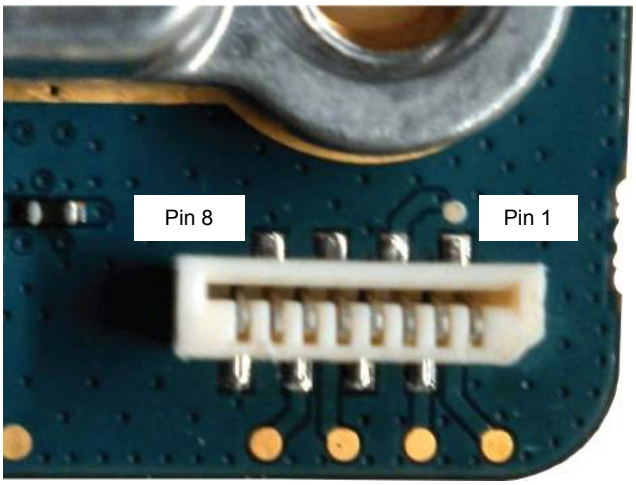

Chapter 4

SLR 5000 Series Power Amplifier

4.1
Description

The Power Amplifier Module is described in this section. A general description, identification of inputs and outputs and functional theory of operation are provided. The information provided is sufficient to give service personnel a functional understanding of the module, allowing maintenance and troubleshooting to the module level.

4.1.1
General Description

The Power Amplifier (PA) is a forced convection-cooled RF power amplifier. It accepts a low-level modulated RF signal from the Exciter Module, and amplifies it for transmission via the site transmit antenna port. The PA is non-linear, and is therefore used for Continuous Wave (CW) applications only. The output power is continually monitored and regulated by a feedback and control loop, with a power output control voltage being generated by the transmitter control circuitry located on the PA. All configuration and control signals are connected to the modem module via the flex connected between the modules.

NOTICE: The power amplifier cooling fan is replaceable and external to the power amplifier itself. See SLR 5000 Series Maintenance and Disassembly/Reassembly on page 97 for replacement details.

4.2
Input and Output Connections

The following figure shows the PA input and output connections.

Figure 15: Input and Output Connections

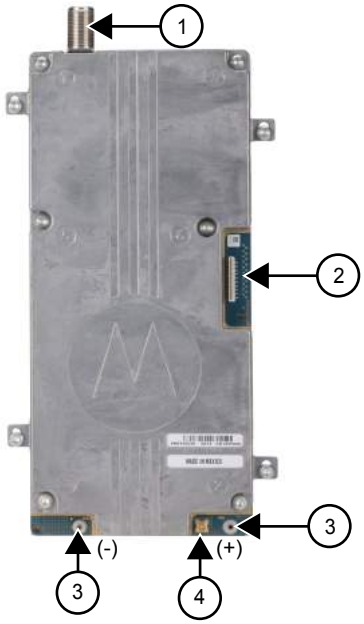

Table 13: Callout Legend

Label	Description
1	Antenna Port
2	Modem Interface
3	DC Input
4	Exciter Input

4.3

Frequency Ranges

The power amplifier modules models cover the following ranges:

- 136–174 MHz
- UHF R1, 400–470 MHz
- UHF R2, 450–527 MHz

4.4

Specifications

Specifications of the SLR 5000 series repeater's Power Amplifier (PA) are available in the following table.

Table 14: Specifications of Power Amplifier

Parameter	Specifications	
	VHF	UHF
Operational Frequency Range	136–174 MHz	UHF R1, 400–470 MHz

Table continued…

Parameter	Specifications	
	VHF	UHF
		UHF R2, 450–527 MHz
Minimum Input Return Loss (Tx mode)	15 dB	
Rated RF Input Power	37 dBm	
Maximum Standby Power Consumption	0.5 W	
Rated RF Output Power Range	1–50 W	
Supply Nominal Voltage [3]	13.6 V (+/- 10%)	
Maximum Current Draw [4]	12.0 A	

4.5 Modem Interface

The digital interface to the modem module utilizes a 20 pin vertical LIF connector. It's location is shown in Figure 15: Input and Output Connections on page 60. See Figure 16: Modem Interface Connector Pin Locations on page 61 for front panel interface connector pin locations.

Figure 16: Modem Interface Connector Pin Locations

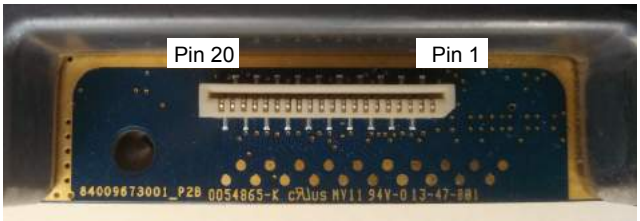

[3] When the SLR 5000 series repeater is operating from a DC source, the PA input voltage follows the repeater's DC input source.

[4] Nominal VSWR conditions (VSWR <1.5:1)

This page intentionally left blank.

Chapter 5

SLR 5000 Series Power Supply

5.1
Description

In this chapter, a general description, performance specifications, and identification of the inputs and outputs are given for the power supply. The information provided is sufficient to give service personnel a functional understanding of the module, allowing maintenance and troubleshooting to the module level. (See SLR 5000 Series Maintenance and Disassembly/Reassembly on page 97 for detailed removal or installation procedures for all modules in the SLR 5000 series repeater.)

5.1.1
General Description

The power supply, with front-to-rear airflow, operates from either an AC or DC input and provides the DC operating voltage for the SLR 5000 series repeater. The power supply also provides an integrated battery charger to maintain the charge on a negatively grounded 12 VDC (nominal) battery system. Figure 17: Front View of the SLR 5000 Series Power Supply on page 64 displays the front and rear views of the SLR 5000 series Power Supply.

Additionally, the power supply affords the following performance features:

- Power Factor Correction (PFC) – aids in lowering the ampacity requirements of the AC power source.
- Over-Voltage Protection (OVP) – lowers the risk of damaging the repeater should input AC or DC levels approach damaging levels.
- Over-Current Protection (OCP) – aids in preventing a cascaded failure within the repeater.
- Reverse Polarity Protection – aids in preventing damage to the repeater due to installation mishaps.
- Configurable Battery Charger Voltage – tailors the float voltage to your battery manufactures charging recommendations.
- Configurable Low Voltage Disconnect (LVD) – tailors the battery disconnect voltage to your battery manufactures recommendations.
- Configurable Power Source Preference – when both AC and DC sources are present (and within their respective operational bounds), this feature allows one to select the primary power source the repeater uses.
- Battery Revert – should the AC source be interrupted, this function allows the power supply to seamlessly transfer to a DC source until the AC source is restored. This results in uninterrupted radio service for as long as DC power can be provided.

NOTICE: A user supplied external 12 V (nominal) battery system is required to support the battery backup feature so that when the AC power fails, the SLR 5000 series repeater can be powered from a DC battery source if it is connected to the PS.

NOTICE: The power supply cooling fan is replaceable and external to the power supply itself. See SLR 5000 Series Maintenance and Disassembly/Reassembly on page 97 for replacement details.

Figure 17: Front View of the SLR 5000 Series Power Supply

Table 15: Callout Legend

Label	Description
1	Air Intake

Figure 18: Rear View of the SLR 5000 Series Power Supply

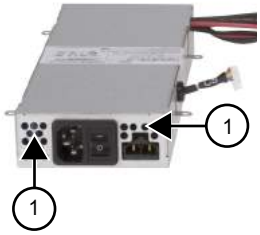

Table 16: Callout Legend

Label	Description
1	Air Exhaust

5.2

Specifications

The following tables show the electrical performance specifications for the Power Supply.

Table 17: Power Supply AC Performance Specifications

Parameter	Value or Range
Input Voltage Range	100–240 VAC
Input Frequency Range	47–63 Hz
Steady State Output Voltage	13.6 ± 0.25 VDC
Output Current (Max)	23 A (excluding charger current)
Output Ripple:	30 mVp-p @ 25 °C (77 °F)

Table 18: Power Supply DC Performance Specifications

Parameter	Value or Range
Input Voltage Range	11–15.5 VDC

Table continued…

Parameter	Value or Range
Steady State Output Voltage	Input voltage dependent (0–0.4 V below input)
Output Current (Max)	26 A
Output Ripple:	30 mV p-p, @ 25 °C (77 °F)

Table 19: Power Supply Battery Charger Performance Specifications

Parameter	Value or Range
Charging Voltage Range	13.5–14.2 VDC (default 13.8 VDC: configurable)
Charging Current (Max)	3 A (in addition to output current)

NOTICE:
California Energy Commission (CEC) Compliance testing was performed with the following recommended 12 V Lead-acid battery:

- Sprinter S12V370NGF
- GNB Industrial Power, a division of Exide Technologies, Aurora, Illinois, USA 60504

Charge time may take up to 40 hr.

5.3
Power Supply Interface

This section describes the power supply interface such as the power source inputs, power supply outputs, its digital interface, and the power supply output cable signaling.

5.3.1
Power Source Inputs

Figure 19: Power Source Inputs

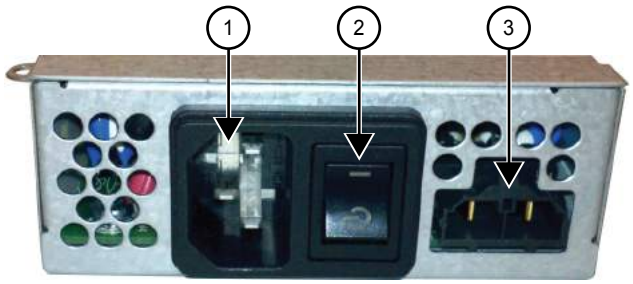

NOTICE: When the power switch is in standby, all outputs are disabled (regardless of input source(s) connected). This includes the charger output as well (if charging is enabled).

Table 20: Callout Legend

Label	Description
1	AC Source Input Connector
2	Power Switch
3	DC Source Input Connector (also charging output)

5.3.2

Power Supply Outputs

Figure 20: Power Supply Outputs

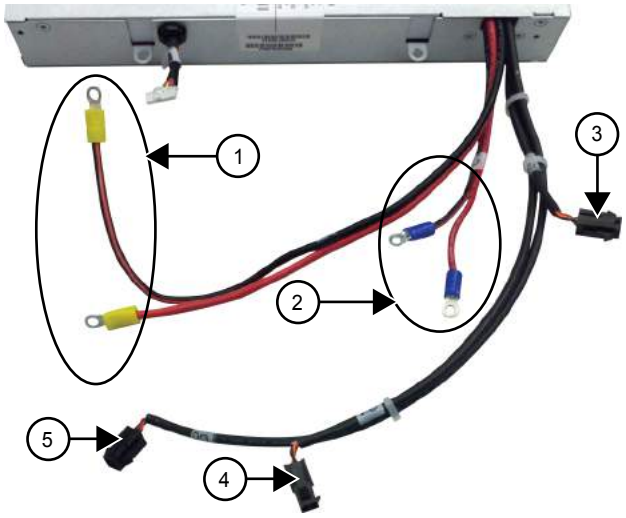

Table 21: Callout Legend

Label	Description
1	Power Amplifier
2	Modem
3	Power Supply Fan
4	Modem Fan
5	Power Amplifier Fan

5.3.3

Power Supply Digital Interface

Figure 21: Power Supply Digital Interface

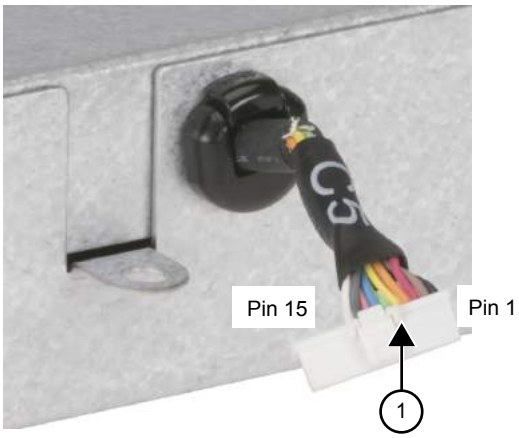

Table 22: Callout Legend

Label	Description
1	Modem Interface

5.3.4

Power Supply Output Cable Signaling

Table 23: Power Supply Output Cable SIgnalling

Output Load	Signal
Power Amplifier	Red – 13.6 VDC (nominal)
	Black with Red Strip – Ground
Modem	Red – 13.6 VDC (nominal)
	Black with Red Strip - Ground
Power Amplifier Fan	Red – 13.6 VDC (nominal)
	Black – Ground
	Yellow – Fan speed detect
	Brown – Fan speed control
Modem Fan	Red – 13.6 VDC (nominal)
	Black – Ground
	Yellow – Fan speed detect
	Brown – Fan speed control
Power Supply Fan	Red – 13.6 VDC (nominal)
	Black – Ground
	Yellow – Fan speed detect

Table continued…

Output Load	Signal
	Brown – Fan speed control

Chapter 6

SLR 5000 Series Front Panel

6.1
Description

The Front Panel Module is described in this section. A general description, identification of inputs and outputs and functional theory of operation are provided. The information provided is sufficient to give service personnel a functional understanding of the module, allowing maintenance and troubleshooting to the module level.

6.1.1
General Description

The Front Panel board user interface includes seven LED indicators and a USB device port.

The board is connected to the modem via a 30 pin flex cable. The LED indicators inform the user of the state of the repeater while the USB device port is used to interface with the repeater through the Customer Programming Software (CPS). The LED indications are transferred to the front panel via a serial peripheral interface.

6.2
Input and Output Connections

Figure 22: Front Panel Input and Output Connections on page 69 shows the various front panel Input and Output connections.

Figure 22: Front Panel Input and Output Connections

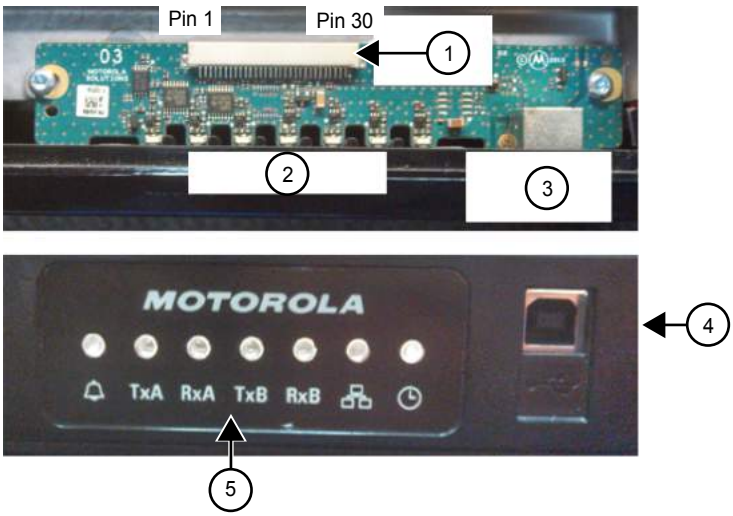

Table 24: Callout Legend

Label	Description
1	Modem Interface
2	LED Indicators

Table continued…

Label	Description
3	USB Device Connector
4	USB Device Connector
5	LED Indicators

6.3
Interfaces

6.3.1
Modem Interface

The interface to the modem is made via a 30 pin flex cable. The connector on the front panel board is a 30 pin horizontal LIF connector. The location can be seen in Figure 22: Front Panel Input and Output Connections on page 69.

6.3.2
User/Service Interface

6.3.2.1
USB

The Front Panel USB device port is the interface used for connecting the repeater to a computer in order to use the Customer Programming Software. See Figure 22: Front Panel Input and Output Connections on page 69 for the location. A standard “Type A” to “Type B” USB cable facilitates the connection. See Appendix A: Accessories on page 133, Service Tools on page 135 for the noted USB cable part number.

6.3.2.2
LED Indicators

The Front Panel houses seven LED indicators used for displaying the state of the repeater. For state details, refer to Table 9: SLR 5000 Series Front Panel LED Definitions on page 46.

Chapter 7

SLR 5000 Series Back Panel

7.1
Description

The Back Panel interface provides the electrical interconnection interface between the SLR 5000 Series Repeater and the end user's system.

This includes the connectors necessary to interface the repeater to RF peripheral equipment, power system, system controllers, LANs, as well as other communications and maintenance equipment. This section provides a general description, identification of inputs/outputs, and a pin-out listing for all connectors, including information on signal names, functions, and levels.

7.1.1
General Description

Figure 23: Back Panel Connector Names and Locations on page 71 shows the various interface connector locations. Table 25: Connector Type and Primary Function on page 71 lists the connector types as well as its primary function.

Figure 23: Back Panel Connector Names and Locations

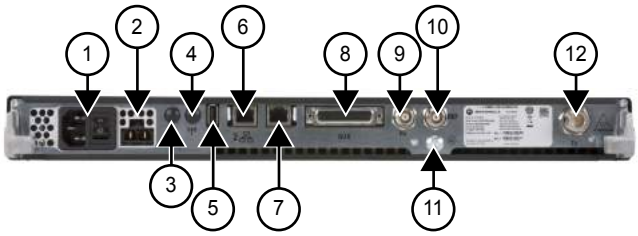

Table 25: Connector Type and Primary Function

Location	Connector Type	Function(s)
1	C14 (IEC 60320)	AC Power Inlet and Repeater Power Switch
2	Molex 42818-0212	DC Power Inlet and DC Charger Outlet
3	Option Dependent	Option Dependent 1
4	Option Dependent	Option Dependent 2
5	Type A Socket	USB
6	RJ-45 – Jack	Ethernet 2
7	RJ-45 – Jack	Ethernet 1
8	DB25 – Female	Aux: Rx Audio, Tx Audio, PTT, COR, Accessory Power, 1 PPS, and GPIO
9	BNC – Female	Receiver RF (Rx)
10	BNC – Female	Frequency Reference Input (REF)
11	T30 TORX Screw	Bonding Ground Connection

Table continued…

Location	Connector Type	Function(s)
12	N-Type – Female	Transmitter RF (Tx)

7.2
Back panel Interfaces

This section describes the back panel interfaces of the SLR 5000 Series Repeater.

7.2.1
AC Power Inlet

The AC power inlet connector is of the C14 type socket (IEC 60320) and accepts interface to C13 type plugged (IEC 60320) power cords. Figure 24: AC Power Inlet Connector on page 72 shows the location of the pins and Table 26: AC Power Inlet Connector on page 72 lists the functional characteristics of the connector's pins.

Figure 24: AC Power Inlet Connector

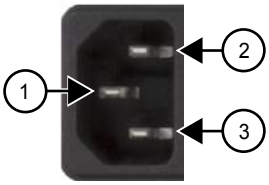

Table 26: AC Power Inlet Connector

Location	Pin Assignment	Type	Signal Characteristics
1	Earth	Power	100–240VAC (Line to Neutral)
2	Line		4 A (max)
3	Neutral		

Figure 25: Repeater Power Switch

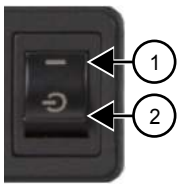

Table 27: Callout Legend

Label	Description
1	ON (fully powered)
2	STANDBY

7.2.2
DC Power Inlet/DC Charger Outlet

The DC power inlet/DC charger outlet connector is a Molex 42818-02012 panel mount receptacle and accepts interface to Molex 42816-0212 plugs. Figure 26: DC Power Inlet/DC Charger Outlet Connector

on page 73 shows the location of the pins and Table 28: DC Power Inlet/DC Charger Outlet Connector on page 73 lists the functional characteristics of the connector's pins.

Figure 26: DC Power Inlet/DC Charger Outlet Connector

Table 28: DC Power Inlet/DC Charger Outlet Connector

Location	Pin Assignment	Type	Signal Characteristics
1	Positive	Power	11–14.4VDC 17 A (max)
2	Negative		

7.2.3
Option 1/GNSS

Not supported at this time (No connection)

Figure 27: Option 1/GNSS Connector

7.2.4
Option 2/WLAN

Not supported at this time (No connection)

Figure 28: Option 2/WLAN Connector

7.2.5
USB

Not supported at this time. Type A socket (Host Connection) that supports the USB 2.1 protocol standard. See Figure 29: USB Connector on page 74 and Table 29: USB Connector on page 74 the location of the pins and the functional characteristics of the connector's pins.

Figure 29: USB Connector

Table 29: USB Connector

Location	Pin Assignment	Type	Signal Characteristics
1	VBUS	USB Physical Layer	+5 VDC
2	D-		3.6 V differential data
3	D+		
4	GND		Ground

7.2.6

Ethernet 1

Fully compliant with IEEE and 802.3 and 802.3u standards. Supports 10Base-T, 100Base-Tx rates, full duplex, half duplex mode and flow control. See the Figure 30: Ethernet 1 Connector on page 74 and Table 30: Ethernet 1 Connector on page 74 for the location of the pins and the functional characteristics of the connector's pins.

Figure 30: Ethernet 1 Connector

Table 30: Ethernet 1 Connector

Location	Pin Assignment	Type	Signal Characteristics
1	Ethernet Tx+	Ethernet Physical Layer	5 V differential data
2	Ethernet Tx-		
3	Ethernet Rx+		
4	Unused		N/A
5	Unused		N/A
6	Ethernet Rx-		5 V differential data
7	Unused		N/A
8	Unused		N/A

7.2.7

Ethernet 2

Not supported at this time. Fully compliant with IEEE and 802.3 and 802.3u standards. Supports 10Base-T, 100Base-Tx rates, full duplex, half duplex mode and flow control. See Figure 31: Ethernet 2 Connector on page 75 and Table 31: Ethernet 2 Connector on page 75 for the location of the pins and the functional characteristics of the connector's pins.

Figure 31: Ethernet 2 Connector

Table 31: Ethernet 2 Connector

Location	Pin Assignment	Type	Signal Characteristics
1	Ethernet Tx+	Ethernet Physical Layer	5 V differential data
2	Ethernet Tx-		
3	Ethernet Rx+		
4	Unused		N/A
5	Unused		N/A
6	Ethernet Rx-		5 V differential data
7	Unused		N/A
8	Unused		N/A

7.2.8

Auxiliary (Aux)

This connection supports the analog interface to the SLR 5000 series repeater, which includes audio, station control, station indicators, accessory power, and provisions for timing used in various system implementations. See the following figure and table for location of the pins and the functional characteristics of the connector's pins.

Figure 32: Auxiliary Connector

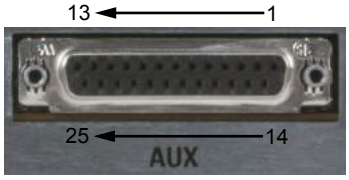

Table 32: Auxiliary Connector

Location	Pin Assignment	Type	Signal Characteristics
1	Tx Audio 1	Audio	Transmit Audio – Nominal input level is 80 mVrms for 60% deviation with scaling factor set to 100%. 600 Ω input impedance.
2	GPIO 1	Digital	Output Logic Low: 0.5 VDC max Output Logic High: Open Collector with 10 k pull-up to 5 V Input Logic Low: 0–0.8 VDC Input Logic High: 3.0–14 VDC
3	Rx Audio 2 [5]	Audio	Receiver Audio – Nominal output level is 330 mVrms (into a 50 k Ohm load) with a 60% deviation receive signal. 1000 Ω output impedance.
4	GPIO 2	Digital	Output Logic Low: 0.5 VDC max Output Logic High: Open Collector with 10 k pull-up to 5 V Input Logic Low: 0–0.8 VDC Input Logic High: 3.0–14 VDC
5	GPIO 10/Analog Input 2 [5]	Digital	Output Logic Low: 0.5 VDC max Output Logic High: Open Collector with 10 k pull-up to 5 V Input Logic Low: 0–0.8 VDC Input Logic High: 3.0–14 VDC Analog: 0–5 VDC
6	GPIO 9/Analog Input 1 [5]	Digital	Output Logic Low: 0.5 VDC max Output Logic High: Open Collector with 10 k pull-up to 5 V Input Logic Low: 0–0.8 VDC Input Logic High: 3.0–14 VDC Analog: 0–5 VDC
7	Rx Audio 1	Audio	Receiver Audio – Nominal output level is 330 mVrms (into a 50 k Ohm load) with a 60% deviation receive signal. 1000 Ω output impedance.
8	GPIO 6	Digital	Receiver Audio – Nominal output level is 330 mVrms with a 60% deviation receive signal. 1000 Ω output impedance.
9	Ground		

Table continued…

[5] Not supported in initial release.

Location	Pin Assignment	Type	Signal Characteristics
10	GPIO 7/Analog RSSI Out [5]	Digital or Analog	Digital: Output Logic Low: 0.5 VDC max Output Logic High: Open Collector with 10 k pull-up to 5 V Input Logic Low: 0–0.8 VDC Input Logic High: 3.0–14 VDC Analog RSSI: Typically 0.5 VDC for -120 dBm to 2.7 VDC for -60 dBm carrier. Variation with carrier level at approximately 50 mV/dBm.
11	GPIO 11/Analog Input 3 [5]	Digital or Analog	Digital: Output Logic Low: 0.5 VDC max Output Logic High: Open Collector with 10 k pull-up to 5 V Input Logic Low: 0–0.8 VDC Input Logic High: 3.0–14 VDC Analog: 0–5 VDC
12	GPIO 12/Analog Input 4 [5]	Digital or Analog	Digital: Output Logic Low: 0.5 VDC max Output Logic High: Open Collector with 10 k pull-up to 5 V Input Logic Low: 0–0.8 VDC Input Logic High: 3.0–14 VDC Analog: 0–5 VDC
13	Tx Data	Digital or Analog	Transmit Data/PL/DPL – Nominal input level is 80 mVrms for 20% deviation with scaling factor set to 100%. 600 Ω input impedance.
14	1 PPS In [5]/Out	Digital	Output Logic Low: 0.5 VDC max Output Logic High: Open Collector with 10 k pull-up to 5 V Input Logic Low: 0–0.8 VDC Input Logic High: 3.0–14 VDC
15	GPIO 3	Digital	Output Logic Low: 0.5 VDC max Output Logic High: Open Collector with 10 k pull-up to 5 V Input Logic Low: 0–0.8 VDC Input Logic High: 3.0–14 VDC
16	Ground		
17			
18			
19			
20	Fused B+	Power	The B+ is 13.6 VDC when repeater is sourced by AC, and can range from 11–14.4 VDC when sourced by DC. 1 A (max).

Table continued…

Location	Pin Assignment	Type	Signal Characteristics
21	GPIO 8/Analog Output 2 [5]	Digital or Analog	Digital: Output Logic Low: 0.5 VDC max Output Logic High: Open Collector with 10 k pull-up to 5 V Input Logic Low: 0–0.8 VDC Input Logic High: 3.0–14 VDC Analog: 0–5 VDC
22	Tx Audio 1	Audio	Transmit Audio – Nominal input level is 80 mVrms for 60% deviation with scaling factor set to 100%. 600 Ω input
23	GPIO 4	Digital	Output Logic Low: 0.5 VDC max Output Logic High: Open Collector with 10 k pull-up to 5 V Input Logic Low: 0–0.8 VDC Input Logic High: 3.0–14 VDC
24	GPIO 5	Digital	Output Logic Low: 0.5 VDC max Output Logic High: Open Collector with 10 k pull-up to 5 V Input Logic Low: 0–0.8 VDC Input Logic High: 3.0–14 VDC
25	Tx Audio 2 [5]	Audio	Transmit Audio – Nominal input level is 80 mVrms for 60% deviation with scaling factor set to 100%. 600 Ω input

7.2.9

Frequency Reference

The Frequency Reference port is a BNC (female) type connector.

Figure 33: Frequency Reference Connector

Various external frequency reference signal types can be provided to the SLR 5000 series repeater for normal operation. Table 33: Frequency Reference on page 78 provides a list of acceptable input signal types as well as their permissible levels.

Table 33: Frequency Reference

Frequency (MHz)	Waveform [6]	Level (Vpp)	Impedance (Ω) [7]	Note
5	Sine	1.5–5.3	100 k	AC Coupled
5	Square [6]	1.5–5.3	100 k	AC Coupled
10	Sine	1.5–5.3	100 k	AC Coupled
10	Square [6]	1.5–5.3	100 k	AC Coupled

[6] Square wave duty cycle range is 45–50%.
[7] Impedance of the SLR 5000 series repeater's frequency reference port.

7.2.10
Receiver RF

The Receiver RF port is a BNC (female) type connector.

Figure 34: Receiver RF Connector

7.2.11
Transmitter RF

The Transmitter RF port is an N-Type (female) type connector. Figure 35: Transmitter RF Connector on page 79 depicts the Transmitter RF connector.

Figure 35: Transmitter RF Connector

7.2.12
Bonding Ground Connection

The repeater Bonding Ground Connection is realized with an M6 x 1 x 3 mm screw (T30 Torx). Figure 36: Bonding Ground Connection on page 79 depicts the Bonding Ground Connection.

Figure 36: Bonding Ground Connection

This page intentionally left blank.

Chapter 8

SLR 5000 Series Test Equipment And Service Aids

8.1
Recommended Test Equipment

The list of equipment includes most of the standard test equipment required for servicing Motorola Solutions SLR 5000 Series Repeater.

Table 34: Recommended Test Equipment

Equipment	Example	Application
Service Monitor	Aeroflex 3920 Digital Radio Test Set or equivalent [8] http://www.aeroflex.com	Frequency/deviation meter, signal generator, oscilloscope, RF power meter for wide-range trouble-shooting, and alignment.
Digital RMS Multimeter	Fluke 179 or equivalent http://www.aeroflex.com.	AC/DC voltage measurements.

8.2
Service Aids

Service Tools on page 135 lists the service aids recommended for working on the SLR 5000 series repeater. While all of these items are available from Motorola Solutions, most are standard workshop equipment items, and any equivalent item capable of the same performance may be substituted for the item listed.

[8] Equivalency can be established with "all-in-one" service monitors and/or the individual functional components of a service monitor (such as RF Signal Generator, RF Spectrum Analyzer, RF Deviation Meter, RF Power Meter, and oscilloscope).

This page intentionally left blank.

Chapter 9

SLR 5000 Series Performance Check or Testing

9.1
General

The SLR 5000 Series Repeater meets published specifications through the manufacturing process by utilizing high-accuracy laboratory-quality test equipment. The recommended field service equipment approaches the accuracy of the manufacturing equipment with few exceptions. This accuracy must be maintained in compliance with the equipment manufacturer's recommended calibration schedule.

NOTICE: Although these repeaters function in digital and analog modes, all testing is done in analog mode. Digital Repeater tests can be performed using an Aeroflex 3900 Series Service Monitor, if the DMR Digital Repeater Test Option is purchased. This auto testing could be performed in lieu of the following Manual testing.

9.2
Transmitter Testing

CAUTION: The SLR 5000 Series Repeater needs to be taken out of service in order to carry out performance testing procedures. Unless the repeater is already out of service, it is recommended to perform the procedures during off-peak hours in order to minimize disruption of service to the system subscribers.

9.2.1
Introduction

While most module faults can be detected by running the repeater diagnostics, the following procedure provides a more traditional method of troubleshooting the transmitter circuitry.

This procedure allows the service technician to make minor adjustments and verify proper operation of the SLR 5000 Series Repeater's transmit circuitry, including:

- Exciter Section of Modem Module
- Power Amplifier Module
- Power Supply Module

In general, the transmitter circuitry is exercised by injecting and measuring signals using a Service Monitor (or equivalent). Incorrect measurement values indicate a faulty module(s); measurement values within the acceptable range verify proper operation of the listed modules and circuitry.

9.2.2
Test Equipment

The following test equipment are required to perform the procedure:

- Aeroflex 3920 Digital Radio Test Set (or equivalent)
- Microphone (GMMN4063_)
- Power Meter and Sensor
- Station Rear Accessory Test Cable

- Dummy Load (50 Ω, repeater wattage or higher)

9.2.3
Verifying Transmitter Circuitry Procedure

Procedure:

1. Connect and set up test equipment as shown in Figure 37: Test Equipment Setup for Verifying Transmitter Circuitry on page 85.
2. Apply input power (AC or DC) to the repeater. The power supply, modem, and PA fans should run a few seconds to confirm fan operation.
3. Press the PTT switch of the microphone and observe the PA Keyed LED indicator on the Repeater Front Panel.

   If PA Keyed fails to light, suspect the following:

   - Faulty Power Amplifier Module
   - Faulty Modem Module
   - Loose or bad Exciter-to-PA RF cable
   - Loose or bad PA-to-antenna RF output cable
   - Improperly terminated PA RF output cable
   - Faulty Power Supply Module
4. Measure output power by pressing the PTT button and observing reading on an in-line wattmeter.
   - If PA output is not at proper power (as set for particular site), adjust the output power as described in the CPS online help.
5. If PA output power is proper, set up the Service Monitor for spectrum analyzer display. Press the PTT button and observe the display. The display should show a single frequency carrier:
   - If the display shows multiple carriers evenly spaced about the carrier, suspect a faulty Exciter module or PA module.
   - If the display shows a solid carrier but it is off frequency, suspect the following:
     - Faulty Modem Module
     - Faulty external 5/10 MHz reference source (if used)
   - If the display shows a single carrier moving erratically, suspect a faulty Modem Module.
6. If display is proper, set up Aeroflex 3900 Series Communications System Analyzer to display modulation. Using the microphone, push the PTT button and speak into the microphone. Verify that the display shows an audio signal.
   - If the proper display is not obtained, suspect faulty SCM or Exciter Module
7. Set the Aeroflex 3900 Series Communications System Analyzer for GEN/MON MTR. Press the PTT button and speak loudly into the microphone to cause maximum deviation. Display should read:
   - 4.60 kHz maximum for a 25 kHz system
   - 3.68 kHz maximum for a 20 kHz system
   - 2.30 kHz maximum for a 12.5 kHz system

   If the proper display is not obtained, suspect faulty SCM or Exciter Module.
8. This completes the Verifying Transmitter Circuitry test procedure. If all displays and measurements are correct, the transmitter circuitry may be considered to be operating properly.

Figure 37: Test Equipment Setup for Verifying Transmitter Circuitry

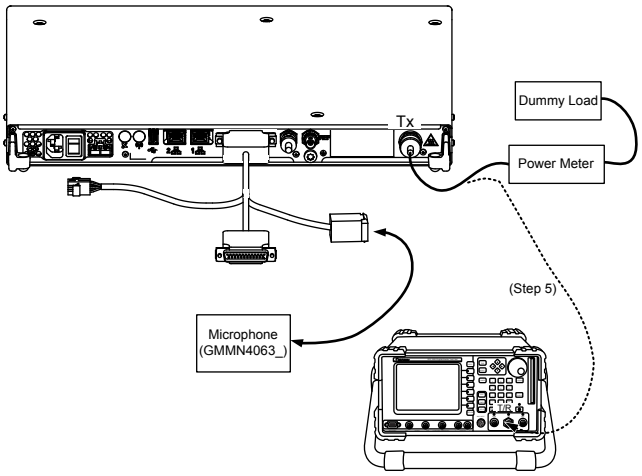

9.3 Receiver Testing

CAUTION:
Performing this procedure requires that the repeater be taken out of service. It is recommended that, unless the SLR 5000 Series Repeater is already out of service, this procedure be performed during
off-peak hours so as to minimize the disruption of service to the system subscribers.

If the repeater operates as a repeater, the transmit output from the repeater must be connected to a dummy load to prevent over-the-air broadcast during Receiver testing.

9.3.1 Introduction

While most module faults can be detected by running the SLR 5000 Series Repeater diagnostics, the following procedure provides a more traditional method of troubleshooting the Receiver circuitry.

This procedure allows the service technician to make minor adjustments and verify proper operation of the receiver circuitry on the Modem Module.

In general, the Receiver circuitry is exercised by injecting and measuring signals using a Service Monitor (or equivalent). Incorrect measurement values indicate a faulty module(s); measurement values within the acceptable range verify proper operation of the receiver circuitry on the Modem Module.

9.3.2 Required Test Equipment

The following test equipment are required to perform the procedure:

- Aeroflex 3920 Digital Radio Test Set (or equivalent)
- Service Speaker (part no. HSN1006_)
- Station Rear Accessory Test Cable
- Dummy Load (50 Ω, repeater wattage or higher) required for repeaters only

9.3.3

Verifying Receiver Circuitry Procedure

Procedure:

1. Connect equipment as shown in Figure 38: Test Equipment Setup for Verifying Receiver Circuitry on page 86.
2. Set the Service Monitor to generate a 1.0 µV (-107 dBm) FM signal at the Receiver frequency, modulated by a 1 kHz tone at 3 kHz deviation for 25/30 kHz channel spacing, or 1.5 kHz deviation for 12.5 kHz channel spacing. The 1 kHz tone should be audible through the external speaker. If no audio is heard, suspect the following:
   - Faulty Modem Module
   - Faulty antenna-to-Receiver preselector RF cable (for the repeater with external metal preselector)
   - Faulty Service Monitor-to-station RF cable
   - Faulty Antenna Relay (If installed)
   - Faulty Preselector (If installed)
   - Rear Panel to Modem Module cable unplugged
   - Faulty rear panel to Modem Module Cable
3. If Audio is heard (the audio volume can be adjusted on the rear of the HSN1006), look at the Oscilloscope window on the Aeroflex 3920 (or a separate O-Scope) and verify that the Audio level Sine Wave measures between 0.75 to 1.5 Vpp. If not, connect to Tuner and increase the RX Audio level until this is achieved. If the level cannot be obtained, suspect a faulty Modem.
4. Move the BNC cable from the Scope CH 1 input to the Audio 1 input.
5. Change System Monitor injection signal level to the noted levels in .
6. Measure the Receiver 12 dB SINAD sensitivity.
   - If the SINAD level is less than 12 dB, suspect faulty Modem.
7. This completes the Verifying Receiver Circuitry test procedure. If all displays and measurements are correct, the Receiver circuitry may be considered to be operating properly. Remove test equipment, restore the repeater to normal service, and (if applicable) return to the troubleshooting flow chart to resume troubleshooting sequence.

Figure 38: Test Equipment Setup for Verifying Receiver Circuitry

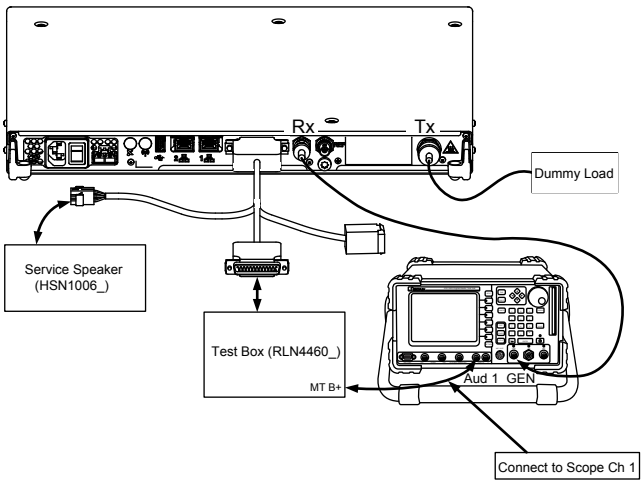

9.4

Auto Test and Tune Support

Auto Test and Tune Support is an automated alignment procedure for the repeater.

This procedure allows you to perform Test and Tune in the right method that saves time and helps to achieve higher efficiency.

To accomplish the overall Test and Tune procedure, the repeater must be tested in two test suites: Analog mode and Digital mode. This procedure includes Tuning and Testing in Analog mode and Testing in Digital mode.

NOTICE: Contact Motorola Solutions Customer Support for more details on this procedure.

This page intentionally left blank.

Chapter 10

SLR 5000 Series Programming and Tuning

10.1 Introduction

This chapter provides an overview of the MOTOTRBO Customer Programming Software (CPS) and the MOTOTRBO Tuner application for use on Windows 7™, Windows 8™, or Windows 8.1™. These two MOTOTRBO applications are used for the configuration and alignment of the SLR 5000 Series Repeater.

10.2 Customer Programming Software Setup

The Customer Programming Software setup, shown in Figure 39: Customer Programming Software Setup on page 89 is used to program the repeater. See Figure 40: Front view of SLR 5000 Series Repeater on page 90 and Figure 41: Rear view of SLR 5000 Series Repeater on page 90 for the actual connectors on the front and rear panels of the repeater.

NOTICE: See appropriate program on-line help files for the programming procedures.

CAUTION: Computer USB ports can be sensitive to Electronic Discharge. Employ proper ESD practices (wrist strap, grounding, etc.) and do not touch exposed contacts on cables when connected to a computer.

Figure 39: Customer Programming Software Setup

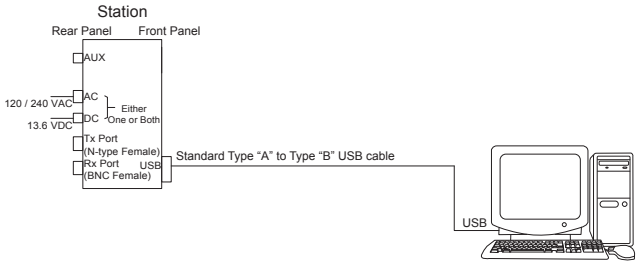

Figure 40: Front view of SLR 5000 Series Repeater

Table 35: Callout Legend

Label	Description
1	USB Port

Figure 41: Rear view of SLR 5000 Series Repeater

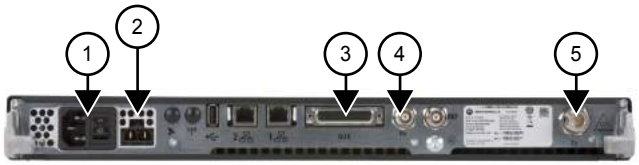

Table 36: Callout Legend

Label	Description
1	AC Inlet Connector
2	DC Inlet Connector
3	Aux Connector
4	Rx RF Connector
5	Tx RF Connector

10.3 Reference Oscillator Alignment

This feature is used to adjust the reference oscillator of the repeater. This alignment process should be done as maintenance schedules and regulations require or if the Modem FRU has been replaced in the repeater.

10.3.1 Tuning the Reference Oscillator Alignment

Procedure:

1. Connect the repeater's transmitter antenna port to the Communication Analyzer.
2. Power the repeater from either an AC or DC source.
3. Launch the Tuner application.

4 To begin reading the repeater's tuning softpot values, click **Read**.

5 Under the **TX** menu in the tree view, select **Ref Oscillator**. (See Figure 42: Tx Menu Tree (Ref. Oscillator) on page 91).

Figure 42: Tx Menu Tree (Ref. Oscillator)

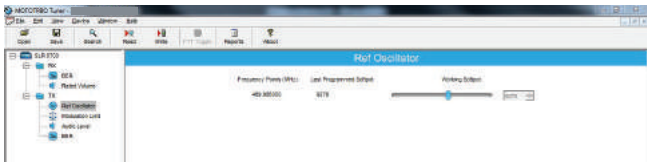

6 Configure the current operating frequency into the Communications Analyzer.

7 To key up the repeater, click **PTT Toggle**.

8 Adjust the working softpot value until the frequency is within the performance specifications (+/- 40 Hz for UHF and VHF) from the frequency point.

9 To de-key the repeater, click **PTT Toggle**.

10 To save the tuned softpot value into the repeater codeplug, click **Write**.

10.4 Repeater Tuning Setup

A personal computer (PC), Windows TM operating system, and the MOTOTRBO Tuner application are required to align the repeater. To perform the tuning procedures, the repeater must be connected to the PC and test equipment setup as shown in Figure 43: SLR 5000 Series Repeater Tuning Equipment Setup on page 91.

Figure 43: SLR 5000 Series Repeater Tuning Equipment Setup

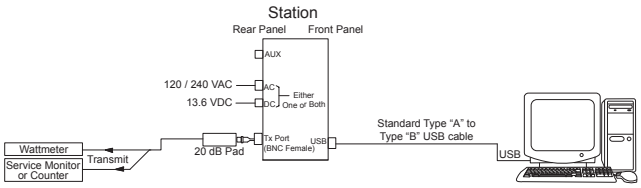

10.5 Rx Audio Level Set

The procedure outlined in this section is used to set the receive output audio level from the repeater for a given RF deviation of the received RF signal. Perform this procedure any time the Rx audio level needs adjustment.

10.5.1 Tuning the Rx Audio Level Set

Procedure:

1 Connect the repeater's receiver antenna port to the Communication Analyzer.

2 Power the repeater from either an AC or DC source.

3 Launch the Tuner application.

4 To read the softpot values, click **Read**.

5 Under the **RX** menu in the tree view, select **Rx Rated Volume**.

Figure 44: Rx Menu tree (Rx Rated Volume)

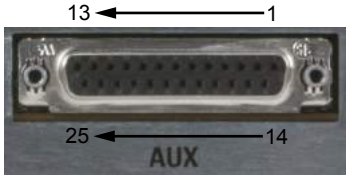

6 Set the Communication Analyzer to output a -47 dBm RF signal modulated with a 1 kHz tone at 60% of full deviation on the tuning frequency. The tuning frequency is the value displayed on the Tuner GUI under the heading of "Frequency Points".

NOTICE:
The Tuner aligns this parameter in a 12.5 kHz channel spacing, so 60% is 1.5 kHz of deviation. If the CPS is set for 25 kHz operation, the repeater automatically scales the deviation by a factor of two when it is outside the Tuner application.

Programmed TPL and DPL squelch requirements are automatically disabled for the tuning frequency while in the Tuner application.

7 Adjust the softpot value until the desired receive audio level is achieved at pin #7 (in reference to ground) on the Aux connector Ground connections provided by the Aux connector are pins: 9, 16, 17, 18, and 19.

Figure 45: Auxiliary Connector

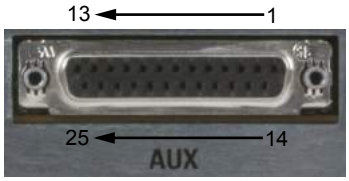

NOTICE: Optimally, it is recommended to load pin #7 with application loading used during normal operation of the repeater.

8 To save the new tuned softpot value into the repeater's codeplug, click **Write**.

10.6 Tx Audio Level Set

The procedure outlined in this section is used to allow adjustment of the transmitter audio level the repeater is expecting at its Aux connector. Adjusting this level set has the effect of increasing or decreasing RF signal deviation for a given transmit audio level. Perform this procedure any time the transmitter audio level needs adjustment.

10.6.1 Tuning the Tx Audio Level Set

Procedure:

1 Connect the repeater’s transmitter antenna port to the Communication Analyzer.

2 Power the repeater from either an AC or DC source.

3 Apply a 1 kHz signal at the desired input level to pin #1 or #22 (in reference to ground) on the Aux connector. Ground connections provided by the Aux connector are pins: 9, 16, 17, 18, and 19. See Figure 45: Auxiliary Connector on page 92.

NOTICE: Optimally, it is recommended to load pin #1 or #22 with the application source impedance used during normal operation of the repeater.

4 Launch the Tuner application.

5 To read the softpot values, click **Read**.

6 Under the **TX** menu in the tree view, select **Tx Audio Level**. (See Figure 46: Tx Menu Tree (Tx Audio Level) on page 93).

Figure 46: Tx Menu Tree (Tx Audio Level)

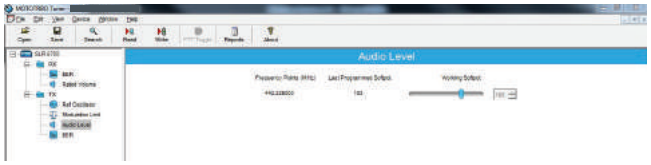

7 Enter the tuning frequency into the Communication Analyzer (the value displayed on the Tuner GUI under the heading of “Frequency Points”).

8 To key up the repeater, click **PTT Toggle**.

9 Adjust the softpot value until 60% of the rated system deviation (RSD) is achieved.

NOTICE: The Tuner aligns this parameter in a 12.5 kHz channel spacing, so 60% is 1.5 kHz of deviation. If the CPS is set for 25 kHz operation, the repeater automatically scales the deviation by a factor of two when it is outside the Tuner application.

10 To de-key the repeater, click **PTT Toggle**.

11 To save the new tuned softpot value into the repeater’s codeplug, click **Write**.

10.7 Modulation Limit Alignment

This feature is to set the modulation limit of the SLR 5000 Series Repeater.

NOTICE: A modulation limit alignment is not needed if the repeater is used in repeat mode. This is always the case when the repeater is in digital mode.

10.7.1 Tuning the Modulation Limit (with no Tx Data and no PL)

Prerequisites: If data or PL signaling is applied to Pin 13 of the Aux connector, proceed to Tuning the Modulation Limit (with Tx Data or PL) on page 95.

Procedure:

1 Connect the repeater's antenna port to the attenuation pad, if necessary, before connecting to the Communication Analyzer.

2 Power the repeater from either an AC or DC source.

3 Apply a 1 kHz signal at 1.2 Vrms to Pin 1 of the Aux connector.

- Signal ground is Pin 9 of the Aux connector.

4 Launch the Tuner application.

5 To read the softpot values, click **Read**.

6 Under the **TX** menu in the tree view, select **Modulation Limit**.

Figure 47: TX Menu Tree (Tuning Procedure with No Tx Data)

7 Enter the tuning frequency into the Communication Analyzer (the value displayed on the Tuner application).

8 To key up the repeater, click **PTT Toggle**.

9 Adjust the softpot value until the maximum deviation is 92% of the rated system deviation (RSD). This is tested in a 12.5 kHz channel spacing, so 92% of 2.5 kHz is 2.3 kHz.

10 Set the modulation limit to 92% so that any additional deviation incurred by the transmitter VCOs over temperature is compensated for.

Channel Spacing (kHz)	RSD (kHz)	92% of RSD (kHz)	Tolerance (Hz)
12.5	2.5	2.3	+0/ -50

11 To de-key the repeater, click **PTT Toggle**

12 To save the new tuned softpot value into the repeater's codeplug, click **Write**.

10.7.2

Verifiying the Modulation Limit (with no Tx Data and no PL)

Procedure:

1 Connect the repeater's antenna port to the attenuation pad, if necessary, before connecting to the Communication Analyzer.

2 Power the repeater from either an AC or DC source.

3 In CPS, program the repeater with any frequency within the specified range of the repeater under test, and set the repeater for low power and disable the repeat path.

4 Apply a 1 kHz signal at 1.2 Vrms to Pin 1 of the Aux connector.

- Signal ground is Pin 9 of the Aux connector.

5 Key up the repeater and measure the deviation

- Key the repeater by grounding Pin 2 of the Aux connector.

NOTICE: CPS must have Pin 2 configured as an active low with the PTT function.

6 De-key the repeater.

The deviation shall meet the limits shown in the following table.

Channel Spacing (kHz)	Relative Standard Deviation (RSD) (kHz)	92% of RS (kHz)	Tolerance (Hz)
12.5	2.5	2.3	+0/-50
20.0	4.0	3.68	+0/-80
25.0	5.0	4.6	+0/-100

NOTICE:

- The repeater is factory-tuned in accordance to this procedure and specification.
- Verification is performed outside of the Tuner application, such as in normal mode.

10.7.3
Tuning the Modulation Limit (with Tx Data or PL)

Procedure:

1. Connect the repeater's antenna port to the attenuation pad, if necessary, before connecting to the Communication Analyzer.
2. Turn on the repeater using an AC or DC source.
3. Launch the Tuner application.
4. To read the softpot values, click **Read**
5. Under the **TX** menu in the tree view, select **Modulation Limit**.
6. Enter the tuning frequency into the Communication Analyzer (the value displayed by the Tuner application).
7. To key up the repeater, click **PTT Toggle**.
8. Apply a 1 kHz signal at 1.2Vrms to Pin 22 of the J7 backplane connector.
   - Signal ground is Pin 9 of the J7 backplane connector.
   - If the manufacturer of the third party controller specifies that the Tx Audio is not to be pre-emphasized, use Pin 1 instead of Pin 22.
9. Adjust the Modulation Limit softpot to a value that limits the maximum deviation to "X"% RSD, where "X" is equal to "92% RSD" minus "Tx Data's % RSD".

   If Tx Data deviation is equal to 17%,

   X = 92% - 17% = 75% as the maximum deviation limit.

   Figure 48: Example of Maximum Deviation Limit Calculation

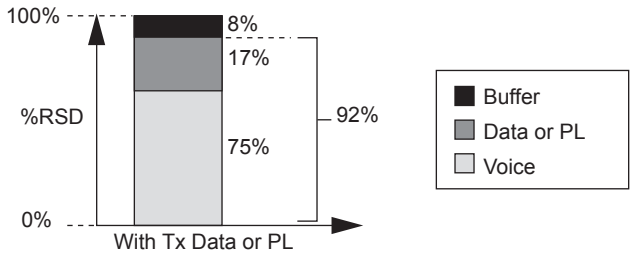

10. To de-key the repeater, click **PTT Toggle** .
11. To save the newly tuned softpot value into the codeplug, click **Write**.
12. Alignment is complete.

NOTICE:

- See Figure 10: Audio Block Diagram on page 56 for details regarding the audio and data flow.
- Set the modulation limit to 92% to compensate for any additional deviation incurred by the transmitter VCOs over temperature.
- The Tuner application always aligns the Modulation Limit parameter in a 12.5 kHz channel spacing regardless of the CPS setting, so calculate the tuning % RSD accordingly. If the CPS is set for 25 kHz operation, the repeater automatically scales the deviation by a factor of two when outside of the Tuner application.

10.7.4
Verifying the Modulation Limit (with Tx Data or PL)

See Verifiying the Modulation Limit (with no Tx Data and no PL) on page 94 with the following exceptions:

- The same Tx data signal level determined (obtained from step 9 in Tuning the Modulation Limit (with Tx Data or PL) on page 95), is applied to Pin 13 during the validation process.
- Pin 22 may be used instead of Pin 1, depending on the recommendation by the manufacturer of the third party controller.

10.8
Changing to Battery Charger Only Mode

This feature allows you to change operation mode from "Normal Mode" to "Battery Charger Only" mode.

Prerequisites: Power the repeater from an AC source and connect the system to a laptop with USB cable. Run the MOTOTRBO Tuner application.

Procedure:

1. Connect the battery to the repeater's DC connector.
2. To read the softpot values, click **Read**.
3. Under the **Device Information** main menu, click **Battery Charger Only Mode**.

   The mode change procedure begins. When the mode change procedure is completed, the display shows `All functions other than the battery charger will be disabled. Do you wish to continue?`

4. Do one of the following:
   - Click **Yes**. The display shows `The Unit is in battery charger only mode. Please remove power for 15 seconds to exit.`
   - Click **No** to return to the main menu.

   Power off for 15 seconds to restore full system functionality. The system only detects and charges another battery after restoring full system functionality.

Chapter 11

SLR 5000 Series Maintenance and Disassembly/Reassembly

11.1 Introduction

This chapter provides details about the following:

- Routine maintenance
- Preventive maintenance (inspection and cleaning)
- Safe handling of CMOS and LDMOS devices
- Disassembly and reassembly of the repeater
- Repair procedures and techniques.

11.2 Routine Maintenance

NOTICE: Clean the repeater with a soft dry cloth while in service.

The SLR 5000 Series Repeater and ancillary equipment have been designed with state-of-the-art technology and operate under software control, thus requiring minimal routine maintenance. Virtually all repeater operating parameters are monitored and self-corrected by the Modem and the firmware it runs, which makes adjustments and tuning virtually unnecessary.

Provided that the equipment is installed in an area which meets the specified environmental requirements, the only routine maintenance task required is the calibration of the repeater reference oscillator circuit.

11.3 Preventive Maintenance

Periodic visual inspection and cleaning is recommended.

11.3.1 Inspection

Check that the external surfaces of the SLR 5000 Series Repeater are clean, and that all external controls and connections are in order. It is not recommended to inspect the interior electronic circuitry.

11.3.2 Cleaning Procedures

The following procedures describe the recommended cleaning agents and the methods to be used when cleaning the external and internal surfaces of the SLR 5000 Series Repeater. External surfaces include the top cover and repeater enclosure.

Periodically clean smudges and grime from exterior enclosure. Use a soft, non-abrasive cloth moistened in a 0.5% solution of mild dishwashing detergent and water solution. Rinse the surface

using a second cloth moistened in clean water, and clean any dirt or debris from the fan grill and louvers on the front side.

NOTICE: Internal surfaces should be cleaned only when the repeater is disassembled for service or repair.

The only factory recommended liquid for cleaning the printed circuit boards and their components is isopropyl alcohol (100% by volume).

Cleaning Internal Circuit Boards and Components

Isopropyl alcohol (100%) may be applied with a stiff, non-metallic, short-bristled brush to dislodge embedded or caked materials located in hard-to-reach areas. The brush stroke should direct the dislodged material out and away from the inside of the repeater. Make sure that controls or tunable components are not soaked with alcohol. Do not use high-pressure air to hasten the drying process since this could cause the liquid to collect in unwanted places. Once the cleaning process is complete, use a soft, absorbent, lintless cloth to dry the area. Do not brush or apply any isopropyl alcohol to the top cover and repeater enclosure.

NOTICE: Always use a fresh supply of alcohol and a clean container to prevent contamination by dissolved material (from previous usage).

11.4 Safe Handling of CMOS and LDMOS Devices

Complementary metal-oxide semiconductor (CMOS) and laterally diffused metal-oxide semiconductor (LDMOS) devices are used in this family of stations, and are susceptible to damage by electrostatic or high voltage charges. Damage can be latent, resulting in failures occurring weeks or months later. Therefore, special precautions must be taken to prevent device damage during disassembly, troubleshooting, and repair.

Handling precautions are mandatory for CMOS/LDMOS circuits and are especially important in low humidity conditions.

DO NOT attempt to disassemble the repeater without first referring to the following CAUTION statement.

CAUTION: This repeater contains static-sensitive devices. Do not open the repeater unless you are properly grounded. Take the following precautions when working on this unit:

- Store and transport all CMOS/LDMOS devices in conductive material so that all exposed leads are shorted together. Do not insert CMOS/LDMOS devices into conventional plastic "snow" trays used for storage and transportation of other semiconductor devices.
- Ground the working surface of the service bench to protect the CMOS/LDMOS device. We recommend using the Motorola Solutions Static Protection Assembly (part number 0180386A82), which includes a wrist strap, two ground cords, a table mat, and a floor mat, ESD shoes and an ESD chair.
- Wear a conductive wrist strap in series with a 100k resistor to ground. (Replacement wrist straps that connect to the bench top covering are Motorola Solutions part number 4280385A59).
- Do not wear nylon clothing while handling CMOS/LDMOS devices.
- Do not insert or remove CMOS/LDMOS devices with power applied. Check all power supplies used for testing CMOS/LDMOS devices to be certain that there are no voltage transients present.
- When straightening CMOS/LDMOS pins, provide ground straps for the apparatus used.
- When soldering, use a grounded soldering iron.
- If at all possible, handle CMOS/LDMOS devices by the package and not by the leads. Prior to touching the unit, touch an electrical ground to remove any static charge that you may have accumulated. The package and substrate may be electrically common. If so, the reaction of a discharge to the case would cause the same damage as touching the leads.

11.5 Disassembly

11.5.1 Disassembly – General

Station modules suspected of being faulty must be replaced with known good modules to restore the repeater to proper operation. The following are typical procedures to remove each of the repeater modules.

Procedure:

1. Power cord (and battery backup power, if used) and all external cables must be disconnected before opening up repeater. Label each removed cable as required to ensure it is properly reconnected.
2. Take the proper grounding precautions as stated in Safe Handling of CMOS and LDMOS Devices on page 98.
3. When disassembling repeater, retain all screws for reuse.

   The following tools are required for disassembling and reassembling the repeater:

   - Torque Drivers (T10, T20 and T30). See Torque Charts on page 117 for the different size fasteners of screw torques.
   - Hex Nut Drivers (16 mm, ¾ inch [19 mm])
   - Needle Nose Pliers (optional)
   - Torque Gauge capable of measuring torque up to 20 in-lb (2.3 N-m) within +/- 1 in-lb (0.1 N-m)

If a unit requires more complete testing or service than is customarily performed at the basic level, send the repeater or FRU to a Motorola Solutions Service Center.

The following disassembly procedures should be performed only if necessary.

11.5.2 Disassembly – Detailed

11.5.2.1 Protective Cover Disassembly

Procedure:

1. Remove the six screws on the Bottom Cover with a T10 Torx driver.
2. Detach the Bottom Cover.
3. Remove the six screws on the Top Cover with a T10 Torx driver.
4. Detach the Top Cover.

11.5.2.2 Front Housing Disassembly

Procedure:

1. Remove the three screws securing the Front Housing to the repeater chassis with a T10 Torx driver.
2. Slightly lift the Repeater and rock the Front Housing away from the chassis.

Figure 49: Removing Front Housing from Repeater

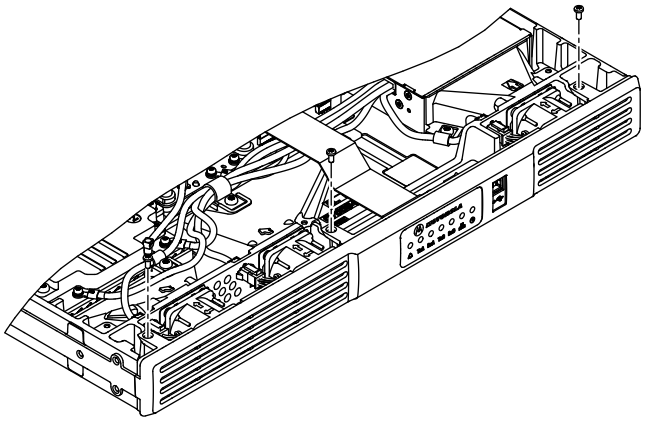

11.5.2.3 Cable Disassembly

Prerequisites:

NOTICE: When disengaging flexible cables, pull parallel to the insertion direction of the cable to avoid damaging the cables.

Procedure:

1. Disengage cable connecting Modem to Chassis ID module.

CAUTION: DO NOT attempt to remove the Chassis ID module as removing it will void the warranty as well as disabling any purchased software features. Keep the Chassis ID module installed throughout disassembly.

2 Remove the flex cables connecting the Modem to the Power Amplifier Module and Front Panel.

3 Remove the coaxial able connecting the Modem to the Power Amplifier Module.

4 Gently press the locking clip and pull the “C5” connector from the Modem.

5 Remove the screws from the three cable clamps securing the cables from the power supply to the fans and modules with a T20 Torx driver and remove the cable clamps from repeater.

6 Remove the two DC power screws from the Power Amplifier Module with a T10 Torx driver.

7 Remove the two DC power screws from the Modem with a T10 Torx driver.

8 Disengage the three connectors from the Power Supply to the three mounted fans with needle nose pliers or fingers.

Figure 50: Removing Cables

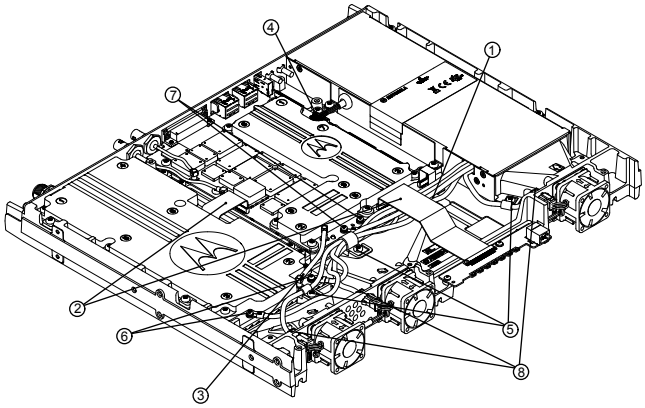

11.5.2.4
Fan Disassembly

Procedure:

1 Press the tab below the fan module until it disengages. See Figure 51: Removing Fan on page 102 for location of tab.

2 Rock the fan module up and away from the frame and remove.

3 Repeat the steps above for the remaining two fan modules.

Figure 51: Removing Fan

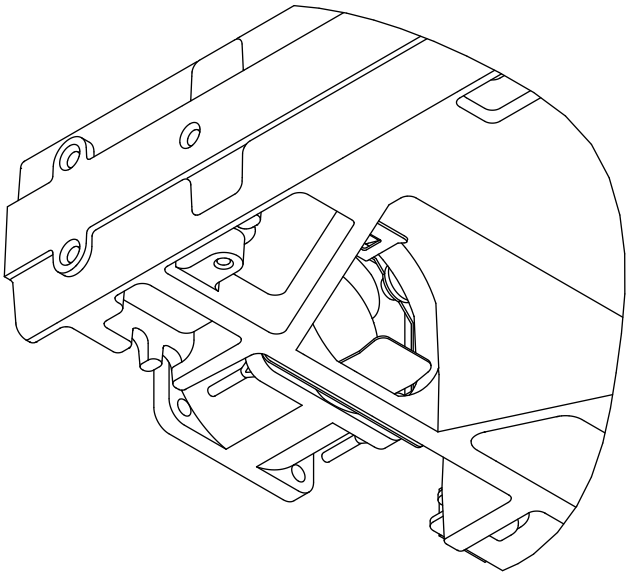

11.5.2.5

Front Panel Disassembly

Procedure:

1. Using a T10 Torx driver, remove the three screws securing the front panel to the repeater chassis.
2. Remove the Front Panel PCB from the repeater.

   Figure 52: Removing Front Panel

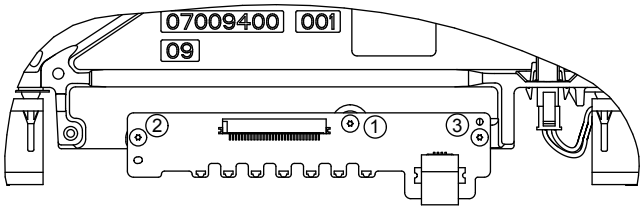

11.5.2.6

Power Supply Removal

Prerequisites:

NOTICE: Ensure all connections from Power Supply to various parts of the repeater have been detached.

Procedure:

1. Remove the four screws securing the Power Supply Module to the repeater chassis with a T20 Torx driver.

Figure 53: Removing Power Supply Module from Repeater

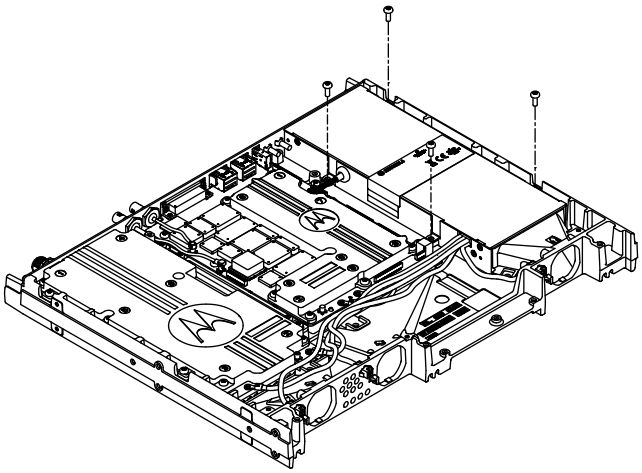

2 Remove the Power Supply Module from the repeater.

11.5.2.7
Modem Removal

Prerequisites:

NOTICE: Ensure all connections from Power Supply to various parts of the repeater have been detached.

Procedure:

1 Detach the two coaxial cables connecting the RX Input and Reference (REF) Input connectors to the Modem.

2 Remove the four screws holding the Modem to the repeater chassis with a T20 Torx driver.

Figure 54: Removing Modem

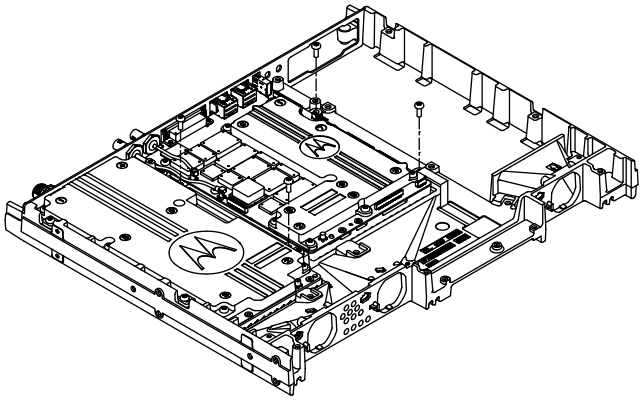

3 Remove the Modem from the repeater.

11.5.2.8
Power Amplifier Module Removal

Prerequisites:

NOTICE: Ensure all connections from Power Supply to various parts of the repeater have been detached.

Procedure:

1. Remove the nut securing the N-Type connector to the back panel on the Power Amplifier with a 0.75 in. (19 mm) hex nut driver.
2. Remove the accompanying lock washer.
3. Remove the four screws securing the Power Amplifier Module to the Repeater chassis with a T20 Torx driver.

   Figure 55: Removing Power Amplifier Module

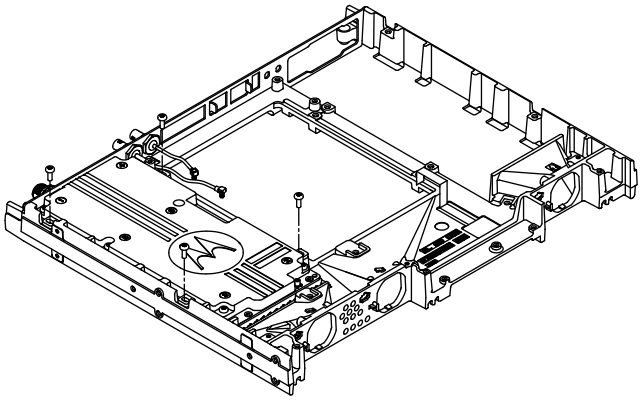

4. Remove the Power Amplifier Module from the Repeater.

11.5.2.9
Back Panel Removal

Procedure:

1. Remove the two nuts securing the RX and Reference (REF) BNC cables to the back panel with a 16 mm hex nut driver.
2. Remove the two corresponding lock washers.
3. Remove the two cables.

   Figure 56: Removing Rx and REF BNC Cables

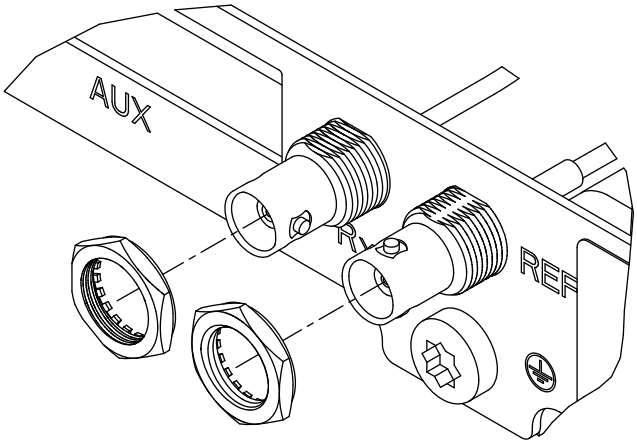

4. Remove the ground screw located below the REF connector with a T30 Torx driver.

Figure 57: Removing Ground Screw

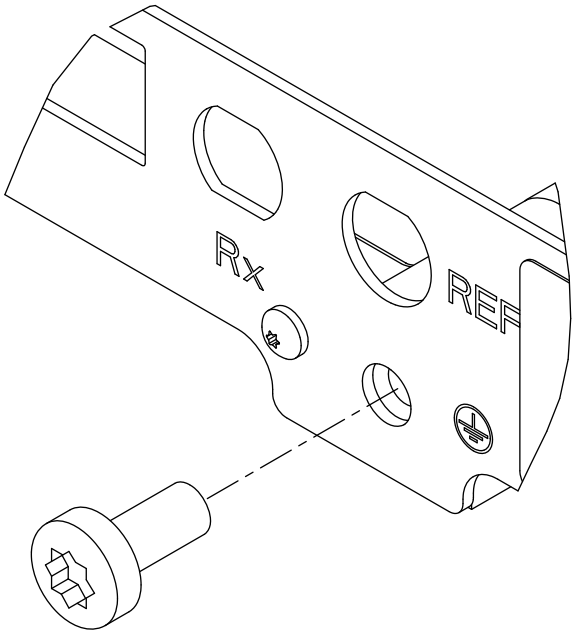

5 Remove the five screws securing the back panel to the repeater chassis with a T10 Torx driver.

6 Remove the back panel from the repeater.

7 Remove the two rubber plugs from the back panel.

11.6 Assembly and Reassembly

11.6.1 Assembly – Detailed

11.6.1.1 Back Panel Installation

Procedure:

1 Using a T10 Torx driver, install five M3 x 0.5 x 6 mm screws (PN: 0310907A18) to 10 in-lb (1.1 N-m). See Figure 58: Installing M3 Screws on page 106.